# UPS
# UNINTERRUPTIBLE POWER SUPPLY


CATALOGUE

A Group brand legrand

inform

# COMPANY PROFILE

Inform Electronic, one of the European leading power solution specialist, is established in 1980 with the aim of designing and building industrial electronic systems. Soon after, it diversified into the production, and marketing of standard professional electronic equipment, and special projects.

The company always combines its experience with its innovative identity and is recognized by its worldwide technology leading character. Right business understanding of Inform makes the company one of the most wanted brands in the world with its exceptional growth ratio. The Company has 31,000 m² closed production area, committed to the manufacturing of electrical products and electronic equipments.

Analysing infrastructural conditions, and customer needs, the company decided to provide complete solutions. Inform product range varies from Uninterruptible Power Supply (UPS) Systems, Voltage Regulators, to DC Power Supply, Telecom Equipments, Battery chargers, Inverters, 19" rack cabinets and other electrical products and electronic equipments.

Since its foundation, INFORM ELECTRONIC has based its strategy on below main policies:

- Quality understanding for its products and services,
- Tailored solutions to specific customer needs,
- Customer satisfaction and happiness,
- After sales service and support
- Continuous improvement for operational excellence and advanced technology

Inform is an official ISO certified company. The company has also Gost, Soncap, and CE certifications. All the Inform products are designed and produced with the worldwide quality understanding, and ISO rules.

Inform was acquired by Legrand Group in 2010.
Legrand is global specialist in electrical and digital building infrastructures. The Group has direct presence in more than 70 countries and number of employee is more than 31.000 people.

**35+**
Years experince

**31.000+**
Manufacture base (m²)

**10.000+**
Monthly production

**450+**
Employees

**30+**
RnD Engineers

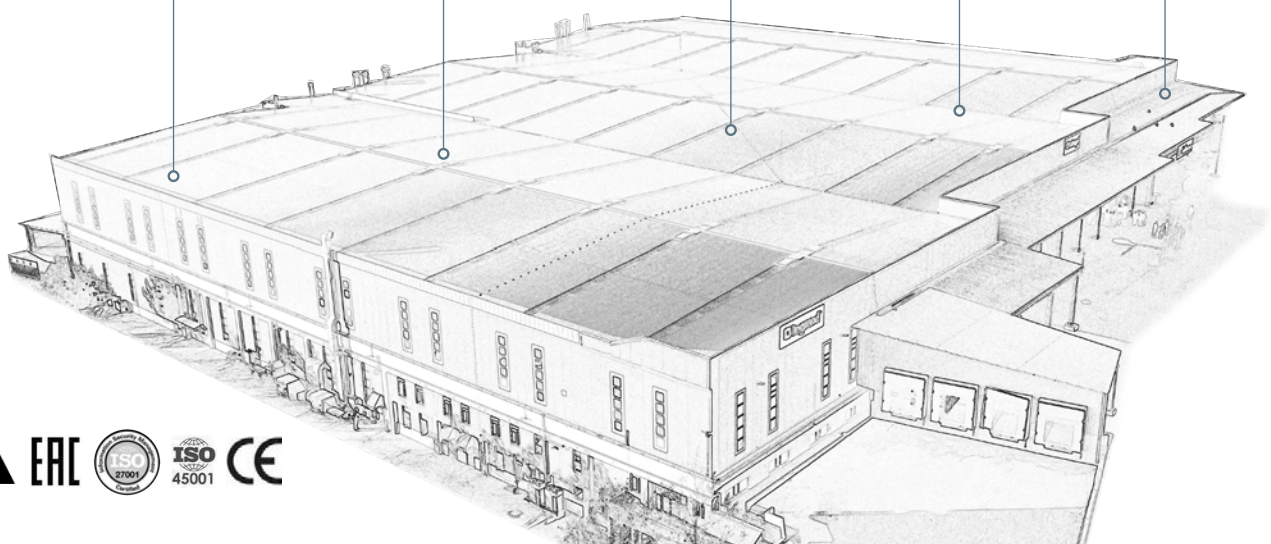

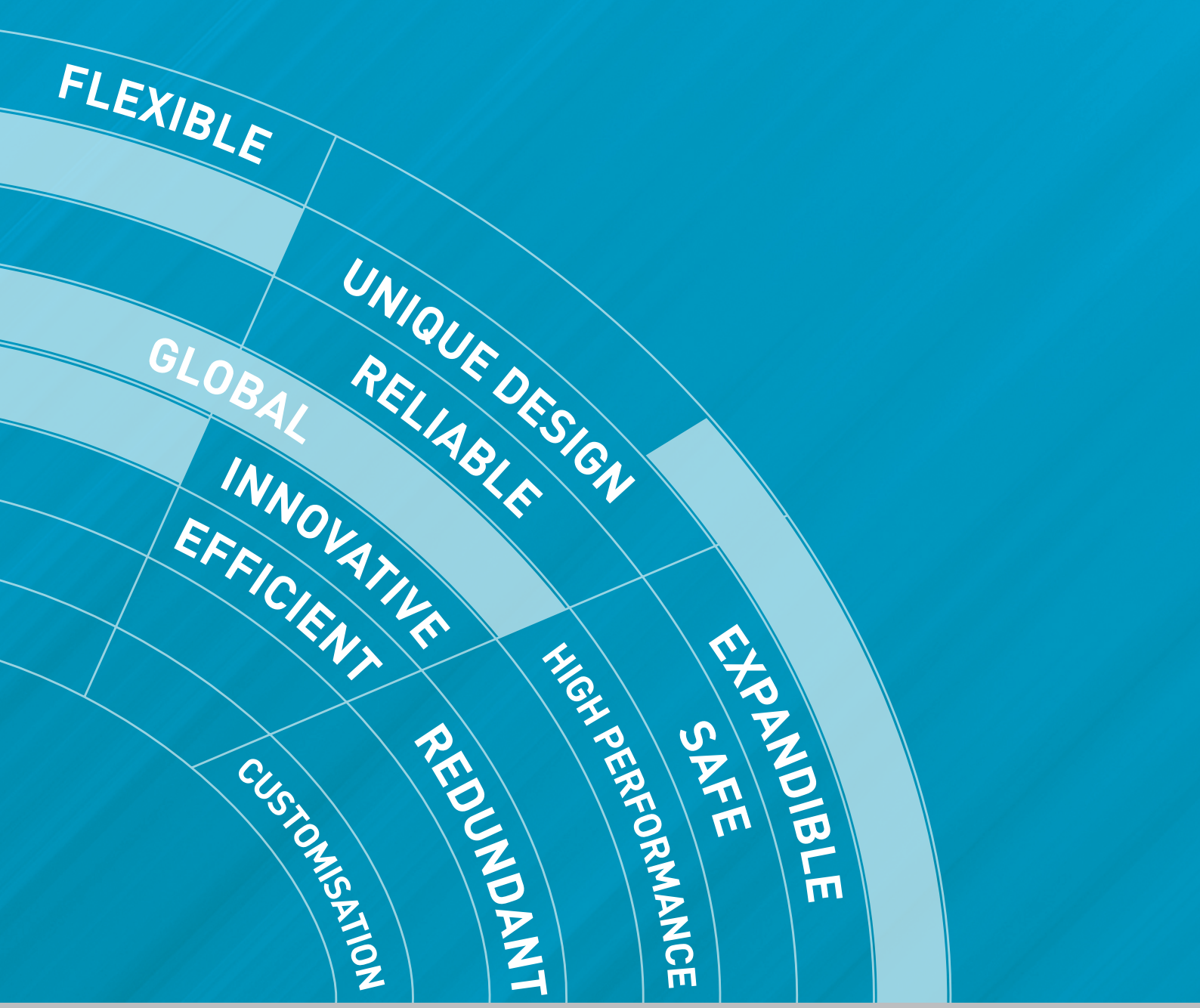


## Quality Control

Inform is able to produce every single part of its products in its premises; electronic boards, mechanical parts, plastic cases, cabling, transformers and many others. Final assembly and testing are done at Inform premises. This gives to Inform the ability to control the **quality at every step** of production.

## Tailor Made Solutions

If standard product features do not fulfill the customer needs, Inform designs can be adapted to a tailor-made specification due to its ability in manufacturing every single part of own products. Whether it is the voltage, frequency and electrical installation standards, Inform provides its customers complete solutions with the **flexible production** capability.

## Thinking Globally, Acting Locally

Having presence everywhere in the world, Inform believes that every market has its own dynamics to be managed closely. So inform has close relation with its partners and supports them with local policies based on global experience.

## Solution Provider

From consumer to industrial and defense grade, from customized to standard, Inform's products display a great variety. **Know-how**, technology developer identity, integrated production, wide product portfolio and engineering skills help Inform to **offer turnkey solutions.**

## Presales Support

Inform distribution network has presence in 5 continents and presents solution to different demands. This enriches Inform's know-how and experience and all of them are shared with the partners. **Technical Presales support** is essential to analyze the requirements and offer the optimum solution.

## Inform Machinery Park

The company has PCB assembling facility in an air-conditioned, specially prepared area for electro static sensible components. In addition to its **automatic assembling** SMD lines, the company has **manual assembling** lines for big components like transformers, coils, and connectors. Quality is the key point for Inform. All the finished PCB is controlled by microscope and optic devices with laser.

## APPLICATION FIELDS

### LINE-INTERACTIVE AND ONLINE UPS

Shops

Small / Home office- SOHO

Home Entertainment systems

### ONLINE STANDALONE / MODULAR

Hospital and healthcare

Office and working areas

Transport / Banking / Defense

### STANDALONE / MODULAR

Data center

Tertiary / Shopping Mall

Industry

# **UPS** PRODUCT RANGE

| PRODUCT | | POWER | | | | | | | | | | | | | |
|---|---|---|---|---|---|---|---|---|---|---|---|---|---|---|---|
| **LINE INTERACTIVE** | | **600 VA** | **800 VA** | **1000 VA** | **1500 VA** | **2000 VA** | **3000 VA** | | | | | | | | |
| Line Interactive | GUARDIAN/ GUARDIAN LCD | √ | √ | √ | √ | √ | | | | | | | | | |
| | INFORMER COMPACT | | | √ | | √ | √ | | | | | | | | |
| **ONLINE UPS** | | **1 kVA** | **2 kVA** | **3 kVA** | **5 kVA** | **6 kVA** | **10 kVA** | **15 kVA** | **20 kVA** | **30 kVA** | **40 kVA** | | | | |
| 1 Ph in -1 Ph out | SINUS / SINUS rack | √ | √ | √ | | | | | | | | | | | |
| | SINUS LCD /convertible | √ | √ | √ | | | | | | | | | | | |
| | SINUS EVO SERIES | √ | √ | √ | | | | | | | | | | | |
| | DSP EVO SERIES | | | | | √ | √ | | | | | | | | |
| | DSP MULTIPOWER /convertible | | | | √ | √ | √ | | | | | | | | |
| | DSP FLEXIPOWER | | | √ | √ | √ | √ | | | | | | | | |
| 3 Ph in - 1 Ph out | DSP MULTIPOWER /convertible | | | | | | √ | √ | √ | | | | | | |
| | DSP FLEXIPOWER | | | | | | √ | | | | | | | | |
| | SAVER PLUS DSP | | | | | | | √ | √ | | | | | | |
| | DSP MULTIPOWER /tower | | | | | | | √ | √ | | | | | | |
| | PYRAMID DSP | | | | | | √ | √ | √ | √ | √ | | | | |
| **ONLINE UPS** | | **10 kVA** | **15 kVA** | **20 kVA** | **30 kVA** | **40 kVA** | **60 kVA** | **80 kVA** | **100 kVA** | **120 kVA** | **160 kVA** | **200 kVA** | **250 kVA** | **300 kVA** | **400 kVA** |
| 3 Ph in - 3 Ph out | FORTE Series | √ | √ | √ | √ | √ | √ | √ | √ | √ | √ | √ | √ | | |
| | PYRAMID DSP Premium | √ | √ | √ | √ | √ | √ | √ | √ | √ | √ | √ | √ | √ | √ |
| | PYRAMID DSP | √ | √ | √ | √ | √ | √ | √ | √ | √ | √ | √ | √ | √ | √ |
| | PYRAMID DSP T | √ | √ | √ | √ | √ | √ | √ | √ | √ | √ | √ | √ | √ | |
| | MODULERA Series | | | √ | | √ | √ | √ | √ | √ | √ | √ | | | |

# INDEX

HOME/OFFICE EMERGENCY

# Guardian & Guardian LCD

1 Phase In – 1 Phase Out / 600 VA – 2000VA

- Microprocessor controlled Line Interactive Technology
- Boost and Buck Automatic Voltage Regulation (AVR)
- LCD or LED Display Panel
- Advanced Battery Management (ABM)
- Input Frequency auto sensing (50/60 Hz)
- Auto restart after mains recovery
- Charging during switched off mode
- Short circuit and overload protection
- Cold Start Function
- USB Communication Interface and Remote Monitoring Software*
- RJ45 or RJ11 tel-modem surge protection**
- Compact size and user friendly operation

VI TYPE — UPS LINE INTERACTIVE | TOWER | PLUG & PLAY | USB | LCD DISPLAY (600-2000 VA)

* Available at AP models only
**Available at LCD AP models only

## TECHNICAL SPECIFICATIONS

| MODEL | GUARDIAN LED - LCD A/AP | | | | |
|---|---|---|---|---|---|
| Nominal Power (VA) | 600VA | 800VA | 1000VA | 1500VA | 2000VA |
| **INPUT** | | | | | |
| Input Voltage | 220V/230V | | | | |
| Input Voltage Range | 162-290VAC | | | | |
| Input Frequency | 50 or 60 Hz (Auto-sensing) | | | | |
| **OUTPUT** | | | | | |
| Output Power Factor | 0,6 | | | | |
| Output Voltage (Battery) | 220V or 230V ± 10% | | | | |
| Output Waveform (Battery) | Simulated Sinewave | | | | |
| Output Frequency (Battery) | 50 or 60 Hz ± 1Hz | | | | |
| Output Voltage Regulation (AVR) | AVR automatically increases output voltage by 15% above of input voltage if input is -10% to -26% of nominal<br>AVR automatically decreases output voltage by 15% below of input voltage if input is +10% to +22% of nominal | | | | |
| Transfer Time | 2 - 6 ms | | | | |
| Outputs | 1xSchuko & 1x IEC C13 | | 2xSchuko & 2xIEC C13 | | |
| **BATTERY** | | | | | |
| Battery Type | Maintenance Free Lead Acid Batteries | | | | |
| Battery Charge Duration | 6 hours (90% capacity) | | | | |
| Nominal DC Voltage | 12VDC | | 24VDC | | |
| Battery Quantity | 1 x 12V 7Ah | 1 x 12V 9Ah | 2 x 12V 7Ah | 2 x 12V 9Ah | |
| **DISPLAY** | | | | | |
| LED Display | Fault (not for 600VA model), Battery Mode, Online Mode | | | | |
| LCD Display | Input-Output Voltage, Battery Capacity, Load and UPS Status | | | | |
| LCD Display Dimension (mm) | 27x19 | | | | |
| **ALARMS** | | | | | |
| Alarms | Battery Mode (Sounding every 10 seconds), Low Battery (Sounding every seconds),<br>Overload (Sounding every 0.5 seconds), Fault (Continuously sounding) | | | | |
| **PROTECTION** | | | | | |
| Protection | Short-circuit, Overload, Battery overcharge-discharge, Tel/Modem (only for AP model) | | | | |
| **COMMUNICATION** | | | | | |
| Interface | AP MODELS: USB PORT, LCD (AP) MODELS: USB PORT and RJ11 (@ 600AP-800AP), RJ45 (@1000AP, 1500AP, 2000AP) | | | | |
| Software | Present at AP models only | | | | |
| **ENVIRONMENTAL** | | | | | |
| Operational Temperature | 0 to 40°C (20 to 25 recommended for longer battery life time) | | | | |
| Humidity | % 0-95 (non-condensing) | | | | |
| Noise Level (1m distance) | <40dBA | | | | |
| Protection Level | IP20 | | | | |
| **PHYSICAL** | | | | | |
| Weight (kg) | 4,2 | 4,9 | 8,2 | 10,4 | 11 |
| Dimensions (WxDxH) mm | 101x279x142 | | 130x320x182 | | |
| **STANDARDS** | | | | | |
| Standards | EN 62040-1-1 (Safety), EN 62040-2 (EMC) | | | | |

HOME/OFFICE EMERGENCY

# Informer Compact

1 Phase In - 1 Phase Out / 1000VA/2000VA/3000VA

- Pure Sinewave Output for any critical load
- User Friendly LCD Display
- Boost and buck Automatic Voltage Regulation
- 97% High Efficiency in Normal Mode
- Communication Port and Remote Monitoring Software
- Overload and Short Circuit Protection
- Advanced Battery Management
- Discharge Protection
- Fault Alarms and State Warnings
- Cold Start Function
- Compact size, light weight and low noise

VI TYPE — UPS LINE INTERACTIVE | TOWER | PLUG & PLAY | USB | LCD DISPLAY (1000-2000-3000VA)

## TECHNICAL SPECIFICATIONS

| MODEL | INF-C1000 | INF-C2000 | INF-C3000 |
|---|---|---|---|
| Capacity (VA) | 1000 | 2000 | 3000 |
| **INPUT** | | | |
| Voltage | 220/230/240VAC ± 25% (adjustable from DIP switches on ups) | | |
| Frequency | 50 or 60Hz ± 5% | | |
| **OUTPUT** | | | |
| Power Factor | 0.6 | | |
| Voltage(on mains) | 220/230/240VAC ± 12% | | |
| Voltage(on battery) | 220/230/240VAC +3% -10% | | |
| Wave Form | Sine Wave, THD < 3 % | | |
| Frequency(on battery) | 50 or 60 Hz ± 0.5% | | |
| Voltage Regulation (AVR) | AVR automatically increase output voltage 15% above input voltage if -9% to 25% of nominal.<br>AVR decrease output voltage 15% below input voltage if +9% to +25% of nominal | | |
| Transfer Time | 4 ms. | | |
| Overload | UPS automatically shuts down if overload exceeds 110% of nominal at 10min.<br>(AC Mode) and if overload exceeds 100% of nominal at 10sec. (Battery model) | | |
| Outlets | 1 pc Schuko & 2 pcs IEC C13 | 1 pc Schuko & 3 pcs IEC C13 | 1 pc Schuko & 3 pcs IEC C13 |
| **BATTERY** | | | |
| Type | Maintenance-free lead acid batteries | | |
| Recharge Time | 2 to 4 hours to 90% | | |
| Voltage | 24Vdc | 48Vdc | |
| Quantity | 2x12V 7Ah | 4x12V 7Ah | 4x12V 9Ah |
| Protection | Automatic self-test & discharge protection, replace battery indicator | | |
| **DISPLAY** | | | |
| LED Display | Utility Normal, Backup, UPS Fault and Battery condition | | |
| LCD Display | Load Level, Battery Level, Bypass, AVR, Battery Low-Replace-Fault, UPS Fault, Overload | | |
| **ALARMS** | | | |
| Alarms | Line Failure, Battery Low, Overload and Fault | | |
| **PROTECTION** | | | |
| | Spike Protection (320 joule, 2 ms), overload protection, short circuit protection | | |
| **COMMUNICATION** | | | |
| Interface (Communication Ports) | USB Standard | | |
| Software | Standard | | |
| **ENVIRONMENT** | | | |
| Operating Temperature | 0-40 °C | | |
| Humidity | 0 to 95% non-condensing | | |
| Audible Noise at 1m | < 40 dBA | < 45 dBA | |
| Protection Class | IP20 | | |
| **PHYSICAL SPECIFICATIONS** | | | |
| Net Weight (kg) | 15.5 | 23 | 27 |
| Dimensions (mm) WxDxH | 175x370x247 | 175x427x247 | |
| **STANDARDS** | | | |
| Standards | EN 62040-1-1 (safety), EN 62040-2(EMC) | | |


# Sinus

## 1 Phase In - 1 Phase Out / 1kVA – 3kVA

- Microprocessor Controlled Online Double Conversion Technology
- Pure sinewave output less than 3% THD
- Wide input voltage range ±27% of nominal
- Smart RS-232 communication port
- Internal SNMP Slot Card Option
- Management software compatible
- Input Power Factor Correction PFC (>0.98)
- Overload & short circuit protection
- Cold start (DC power on)
- Genius battery management (GBM)
- Compact size, light weight & low noise
- Rack version available

19" Rack Mount Type


## TECHNICAL SPECIFICATIONS

| MODEL | SS 210 | SS 220 | SS 230 |
|---|---|---|---|
| Capacity (kVA) | 1 | 2 | 3 |
| **INPUT** | | | |
| Voltage | 160VAC - 280VAC | | |
| Frequency | 50/60 Hz ±5% | | |
| Power Factor | 0,98 | | |
| **OUTPUT** | | | |
| Output Power Factor | 0,7 | | |
| Voltage | 220VAC / 230 / 240VAC | | |
| Voltage Regulation | ±%2 | | |
| Frequency | 50/60 Hz (Auto detection) | | |
| Frequency Regulation | ± 0,5% | | |
| Harmonic Distortion | <3% (for linear loads) | | |
| Crest Factor | 3:1 | | |
| Output Waveform | Sinusoidal | | |
| Overload Capacity | 100%-120% for 60 seconds, 120%-150% for 10 seconds | | |
| Whole efficiency | up to 88% | | |
| Inverter efficiency | >90% | | |
| Transfer Time | 0ms | | |
| Outlets | 2pcs IEC C13 & 1pc Schuko Outlets | 3pcs IEC C13 & 1pc Schuko Outlets | 3pcs IEC C13 & 1pc Schuko Outlets |
| **BATTERY** | | | |
| Type | Maintenance-free lead acid batteries | | |
| Recharge Time | 8 hours(to 90% of full capacity) | | |
| Voltage | 36VDC | 72VDC | 96VDC |
| Internal Battery | 3 pcs 12V 7Ah | 6 pcs 12V 7Ah | 8 pcs 12V 7Ah |
| Back Up Time Full Load | 6 min | | 5 min |
| Half Load | 15 min | | 12 min |
| **DISPLAY** | | | |
| LED Display | Utility, Inverter, Bypass Mode, Fault, Overload, Battery Low, Self-test, Load/Battery Level | | |
| **ALARMS** | | | |
| | Line Failure, Battery Low, Transfer to Bypass, Failure Events | | |
| **PROTECTION** | | | |
| | short circuit, over temperature, overload, high voltage, battery low | | |
| **COMMUNICATION** | | | |
| Interface (Communication Port) | RS-232 Standard | | |
| Monitoring and Management Software | Standard | | |
| **ENVIRONMENT** | | | |
| Temperature | 0°C - 40°C | | |
| Humidity | 0-95% non-condensing | | |
| Noise Level (1m Distance) | <45dBA | | |
| Protection Class | IP20 | | |
| **PHYSICAL SPECIFICATIONS** | | | |
| **Tower Type** | | | |
| Net Weight (kg) | 15 | 29 | 35 |
| Dimensions (mm) WxDxH | 147x401x223 | 130x475x360 | 190x450x360 |
| **19" Rack Mount Type** | | | |
| Net Weight (kg) | 16 | 28 | 37 |
| Dimensions (mm) WxDxH | 483x390x88 | 483x485x130 | 483x460x192 |
| **STANDARDS** | | | |
| Standards | EN 62040-1-1 (safety), EN 62040-2(EMC) | | |
| **ACCESSORIES** | | | |
| Optional | Internal&External SNMP, Dry Contact Board, USB Board, Internal Additional Charger for External Batteries, External Manual Bypass Panel | | |

HOME/OFFICE | DATA CENTER | MEDICAL | INDUSTRY | TRANSPORTATION | EMERGENCY

# Sinus LCD

## 1 Phase In - 1 Phase Out / 1kVA – 3kVA

- On-line 'double conversion' technology
- Real Digital Signal Processor (DSP) Controller
- Power factor correction PFC (>0,99)
- User friendly LCD display
- Programmable Receptacles
- Wide input voltage range and frequency
- Availability to configure as 50/60Hz Frequency Converter from LCD Panel
- Smart communication port and SNMP management capability
- Hot Swappable Battery
- Emergency shutdown control through EPO
- Overload & short circuit protection
- Cold start (DC power on)
- Genius battery management (GBM)
- RS232, USB and SNMP can be activated simultaneously
- Compact size, light weight & low noise

VFI TYPE | UPS ONLINE | CONVERTIBLE (RACK/TOWER) | PLUG & PLAY | USB | LCD DISPLAY (1-3kVA)

## TECHNICAL SPECIFICATIONS

| MODEL | SS LCD 210 | SS LCD 220 | SS LCD 230 |
|---|---|---|---|
| Power(kVA) | 1 | 2 | 3 |
| **INPUT** | | | |
| Voltage | 160VAC - 288VAC | | |
| Frequency | 50/60 Hz ± 5% (Auto Sensing) | | |
| Power Factor | >99% | | |
| **OUTPUT** | | | |
| Power Factor | 0,8 | | |
| Voltage | 220VAC / 230 / 240VAC | | |
| Voltage Regulation | ±%1 | | |
| Frequency | 50/60 Hz | | |
| Frequency Regulation | ± 0,1% | | |
| Harmonic Distortion | <3% | | |
| Crest Factor | 3:1 | | |
| Output Waveform | Sinusoidal | | |
| Overload Capacity | 100%-120% for 30 seconds | | |
| | 120%-150% for 10seconds | | |
| Whole efficiency | >85% | | >88% |
| Transfer Time | 0ms | | |
| Outlets | 6 pcs IEC C13 or 2pc Schuko | 6 pcs IEC C13 or 2pcs Schuko | 4pcs IEC C13 or 2pcs Schuko |
| **BATTERY** | | | |
| Type | Maintenance-free lead acid batteries | | |
| Recharge Time | 3 hours (to 90% of full capacity) | | |
| Voltage | 36VDC | 72VDC | |
| Internal Battery | 3pcs 12V 7Ah | 6pcs 12V 7Ah | 6pcs 12V 9Ah |
| Back Up Time Full Load | 5 min | | 4 min |
| Half Load | 12 min | | 10 min |
| Cold Start | YES | | |
| **DISPLAY** | | | |
| LED Display | Utility or Bypass, Battery Low, Battery Abnormal, Overload, Site Wiring Fault, Service Mode, UPS Off, UPS Abnormal | | |
| LCD Display | Input /Output Voltage and Frequency Values, Load%, Battery Voltage, Internal Temperature | | |
| **ALARMS** | | | |
| | Line Failure, Battery Low, Over Load, Failure Events | | |
| **PROTECTIONS** | | | |
| | Short Circuit, Over Temperature, Overload, High Voltage, Battery Low, EPO | | |
| **COMMUNICATION** | | | |
| Interface | RS232 and USB | | |
| **ENVIRONMENT** | | | |
| Temperature | 0°C - 40°C | | |
| Humidity | 0% - 95% (without condensation) | | |
| Noise Level(1m distance) | <50dBA (at 1 meter) | | |
| Protection Class | IP 20 | | |
| **PHYSICAL** | | | |
| Net Weight (kg) | 16 | 29,5 | 30 |
| Dimensions (mm) WxDxH (Rack) | 440x450x88 | 440x650x88 | 440x650x88 |
| **STANDARDS** | | | |
| | EN 62040-1-1 (safety), EN 62040-2(EMC) | | |
| **ACCESSORIES** | | | |
| | Internal&External SNMP, Dry Contact Board, External Manual Bypass, Rail Kit, Software | | |

HOME/OFFICE MEDICAL EMERGENCY

# Sinus EVO

## 1 Phase In - 1 Phase Out / 1kVA – 3kVA

- On-line 'double conversion' technology
- High Output Power Factor (0,9)
- Input Power Factor correction PFC (>0,99)
- User friendly LCD display
- High Efficiency
- Wide Input Voltage & Frequency Range
- Smart Battery Management System
- 50/60Hz Frequency Converter Operation Mode
- Wide communication option
  Standard: RS-232 and USB
  Optional: SNMP, Dry contact board, Modbus, EPO
- ECO Mode operation feature
- Environment Friendly

VFI TYPE UPS ONLINE | TOWER | PLUG & PLAY | USB | LCD DISPLAY (1-3kVA)

## TECHNICAL SPECIFICATIONS

| MODEL | | Sinus EVO 1kVA | Sinus EVO 2kVA | Sinus EVO 3kVA |
|---|---|---|---|---|
| Output Power Factor | | 0.9 | | |
| **INPUT** | | | | |
| Input Voltage Range | | 120- 300VAC | | |
| Input Frequency Range | | 40Hz ~ 70 Hz | | |
| Phase | | 1PH - N - PE | | |
| Power Factor | | ⩾ 0.99 @ nominal input voltage | | |
| **OUTPUT** | | | | |
| Output Voltage | | 208/220/230/240VAC | | |
| Voltage Regulation | | ±2% (Online Mode), ±1% (Battery Mode) | | |
| Frequency | | 47 ~ 53 Hz or 57 ~ 63 Hz (Synchronized Range) | | |
| Frequency (@Battery Mode) | | 50 Hz ± 0.5% or 60Hz ± 0.5% | | |
| Overload | | 105%~110%: 10 minute ,110%~130%: 1 minute, >130%: 3 second | | |
| Crest Factor | | 3:1 | | |
| THD | | ⩽ 3 % THD (linear load); ⩽ 6 % THD (non-linear load) | | |
| Transfer Time | Online Mode - Battery Mode | 0 | | |
| | Inverter - Bypass | 4 ms (typical) | | |
| Battery Mode Waveform | | Pure Sinus | | |
| Outputs | | 3xIEC Type + 1xSchuko | | 3xIEC Type + 2xSchuko |
| Eco Mode | | Present | | |
| Frequency Converter | | Present | | |
| **EFFICIENCY** | | | | |
| Online Mode | | 90% | | |
| Battery Mode | | 88% | | |
| **BATTERY** | | | | |
| Battery Type | | 12 V / Maintenance-free lead acid batteries | | |
| QTY | | 2 x 7Ah | 4 x 9Ah | 6 x 9Ah |
| Charge Time | | 4 hour 90% capacity (typical) | | |
| Charge Current | | 1.0 A (max.) | | |
| Automatic Battery Test | | Present (@ start-up, 1/per week) | | |
| Charge Voltage | | 27.4 VDC ± 1% | 54.7 VDC ±1% | 82.1 VDC ±1% |
| **PHYSICAL** | | | | |
| Dimensions W x D x H (mm) | | 282 x 145 x 220 | 397 x 145 x 220 | 421 x 190 x 318 |
| Weight (kg) | | 9,8 | 17 | 27,6 |
| LCD Display (mm) | | 55x27.5 | | |
| **ENVIRONMENTAL** | | | | |
| Temperature | | 0- 40°C (20 to 25 recomended for longer battery life time) | | |
| Humidity | | 95 % RH (non-condensing) | | |
| Noise Level (1m distance) | | <50dBA | | |
| **COMMUNICATION** | | | | |
| Standard | | Smart RS-232 and USB (Software) | | |
| Optional | | SNMP, Dry Contact, Modbus, EPO | | |

HOME/OFFICE | DATA CENTER | MEDICAL | INDUSTRY | TRANSPORTATION | EMERGENCY

# DSP EVO

## 1 Phase In – 1 Phase Out / 6kVA – 10kVA

- Microprocessor controlled
  Online 'double conversion' technology
- High Output Power Factor (0,9)
- Input power factor correction PFC (>0,99)
- User friendly LCD display
- High Efficiency
- Wide Input Voltage & Frequency Range
- Intelligent Battery Management System
- 50/60Hz Frequency
  Converter Operation Mode
- Generator compatible
- Wide communication option
  Standard: RS-232 and USB, EPO
  Optional: SNMP, Dry contact board, Modbus
- ECO Mode operation feature
- Environment friendly

VFI TYPE | UPS ONLINE | TOWER | USB | LCD DISPLAY (6-10kVA) | SERVICE

## TECHNICAL SPECIFICATIONS

| | DSP EVO 6 KVA | DSP EVO 10 KVA |
|---|---|---|
| Output Power Factor | 0.9 | |
| **INPUT** | | |
| Input Voltage Range | 110 - 300VAC @ %50 Load<br>176 - 300VAC @ %100 Load | |
| Input Frequency Range | 46Hz ~ 54 Hz @ 50Hz system<br>56Hz ~ 64 Hz @ 60Hz system | |
| Phase | 1PH - N - PE | |
| Power Factor | ⩾ 0.99 | |
| **OUTPUT** | | |
| Output Voltage | 208/220/230/240VAC | |
| Voltage Regulation | ±2% (Online Mode), ±1% (Battery Mode) | |
| Frequency | 46 ~ 54 Hz or 56 ~ 64 Hz (Synchronized Range) | |
| Frequency (@Battery Mode) | 50 Hz ± 0.1% or 60Hz ± 0.1% | |
| Overload | ONLINE: 100%~110%: 30 minute ,110%~130%: 5 minute, >130%: 10 second<br>BATTERY: 100%~110%: 3 minute ,110%~130%: 30 second, >130%: 10 second | |
| Crest Factor | 3:1 | |
| THDv | ⩽ 3 % THDv (linear load); ⩽ 5 % THDv (non-linear load) | |
| Transfer Time | 0 ms | |
| **EFFICIENCY** | | |
| Online Mode | 93% | |
| Battery Mode | 91% | |
| **BATTERY** | | |
| Internal Battery Type | 12V 7Ah or 12V 9Ah | |
| QTY | 16 | |
| Automatic Battery Test | PRESENT (@ start-up, 1/per week) | |
| Charge Time | 9 hour 90% capacity (Typical) | |
| Charge Current | 1A, 2A, 4A and max: 6A (adjustable)<br>(for 16pcs battery: max 6A) | |
| Charge Voltage | 218.4V ± 1% | |
| **PHYSICAL** | | |
| Dimensions W x D x H (mm) | 369 x 190 x 688 | 442 x 190 x 688 |
| Weight (kg) | 61 | 66 |
| **ENVIRONMENTAL** | | |
| Humidity | 0- 95 % RH (non-condensing) | |
| Temperature | 0 to 40°C (20 to 25 recomended for longer battery life time) | |
| Noise Level (1m distance) | <55dBA | <58dBA |
| **COMMUNICATION** | | |
| Standard | RS-232 and USB, EPO | |
| Optional | SNMP, Dry Contact, Modbus | |

HOME/OFFICE | DATA CENTER | MEDICAL | INDUSTRY | TRANSPORTATION | EMERGENCY

# DSP Multipower Convertible

## 1 Phase In - 1 Phase Out / 5kVA – 10kVA
## 3 Phase In - 1 Phase Out / 10kVA – 20kVA

- On-line 'double conversion' technology
- Real Digital Signal Processor (DSP) Controller
- Parallel redundant operation up to 4 units
- Input Power Factor Correction PFC
- High output power factor (PF : 0.9)
- Low total harmonic distortion (THD) level
- Convertible display helps to use both for tower and rack applications
- Transformerless Design
- Availability to configure as 50/60Hz Frequency Converter from LCD Panel
- High Performance with the PWM Sinewave Topology
- Cold Start Function
- Intelligent Battery Management System extends the life time of batteries
- Overload, Overheat & Short Circuit Protections
- User Friendly Multi-Functional LED/LCD Display Panel
- Energy Saving Mode (ECOMODE)
- Smart Fan Speed Regulation with temperature controlled
- RS232 Communication Port & Management Software
- Internal SNMP, DRY contact, RS485 card options

VFI TYPE | UPS ONLINE | TOWER | RACK | LCD DISPLAY (5-20kVA) | SERVICE

## TECHNICAL SPECIFICATIONS

| MODEL | DSPMP-1105 | DSPMP-1106 | DSPMP-1110 | DSPMP-3110 | DSPMP-3115 | DSPMP-3120 |
|---|---|---|---|---|---|---|
| Power (kVA) | 5 | 6 | 10 | 10 | 15 | 20 |
| Power (kW) | 4,5 | 5,4 | 9 | 9 | 13,5 | 18 |
| **INPUT** | | | | | | |
| Phase Configuration | 1Ph + N + PE (Hardwire) | | | 3Ph + N + PE (Hardwire) | | |
| Nominal Voltage | 220VAC/230VAC/240VAC | | | 380VAC/400VAC/415VAC | | |
| Minimum Voltage (at Half load) | 160VAC | | | 277VAC | | |
| Minimum Voltage (at Full load) | 180VAC | | | 312VAC | | |
| Maximum Voltage | 280VAC | | | 485VAC | | |
| Frequency | 45-65 Hz | | | | | |
| Power Factor | 0.99 | | | | 0.95 | |
| **OUTPUT** | | | | | | |
| Power Factor | 0,9 | | | | | |
| Phase Configuration | 1Ph + N + PE (Hardwire) | | | | | |
| Nominal Voltage | 220VAC / 230VAC / 240VAC | | | | | |
| Wave Form | Pure Sine Wave | | | | | |
| Total Harmonic Distortion at 100% linear load | <3% | | | | | |
| at 100% non-linear load | <5% | | | | | |
| Frequency | 50Hz or 60Hz (adjustable) | | | | | |
| Frequency Tolerance(free running) | ±0,1 % | | | | | |
| Frequency Synchronized Range | ±1Hz; ±3Hz (selectable) | | | | | |
| Static Voltage Regulation (0%-100% load) | <1% | | | | | |
| Crest Factor | 3 | | | | | |
| Transfer Time | 0sec | | | | | |
| Overload | Up to 10min. @100%~120% | | | | | |
| | Up to 1min. @120%~150% | | | | | |
| | Transfer to bypass @ >150% | | | | | |
| Total Efficiency | up to 90% | | up to 91% | | up to 93% | |
| Greenmode efficiency | ≥97% | | | | | |
| Outlets | External Socket Box (2 pcs SCHUKO, 4 pcs IEC C13 Outlets) Optional | | | | | |
| **BATTERY** | | | | | | |
| Type | Maintenance-free lead acid batteries | | | | | |
| Recharge Time | 4-6h up to 90% | | | | | |
| Voltage | 240VDC | | | | 192VDC for 16 pcs<br>240VDC for 20 pcs | |
| Quantity per string | 20 pcs 12V Batteries | | | | (20 pcs 12V Batteries) or<br>(16 pcs 12V Batteries)** | |
| Internal batteries | 20 pcs 12V 4.5Ah (internal battery version only) | | 20 pcs 7Ah / 9Ah | | N/A | |
| Built in max. Charge Current | 1.6A | | | | 4A | |
| Cold Start | Present | | | | | |
| **DISPLAY** | | | | | | |
| LED + LCD Display | Line Mode, Backup Mode, ECO Mode, Bypass Supply, Battery Low, Battery Bad/Disconnect, Overload and Transferring with Interruption & UPS Fault | | | | | |
| LCD display | Input Voltage, Input Frequency, Output Voltage, Output Current, Output Frequency, Load Percentage, Battery Voltage & Inner Temperature. | | | | | |
| Self Diagnostics | Upon Power-on, Front Panel Setting & Software Control, 24-hour routine checking | | | | | |
| Audible and Visual Alarms | Line Failure, Battery Low, Transfer to Bypass, System Fault Conditions | | | | | |
| **PROTECTION** | | | | | | |
| Overload Protection | Bypass transfer time is calculated by simulating a temperature related model of a fuse | | | | | |
| Short Circuit Protection | Acts as the ideal current source during the short circuit time | | | | | |
| Other Protection | Against excessive (heat,voltage,current) intense battery discharge | | | | | |
| **COMMUNICATION** | | | | | | |
| Interface (Communication ports) | Standard RS232 port and optional RS485, Internal SNMP, Dry Contact Cards | | | | | |
| **ENVIRONMENT** | | | | | | |
| Operating Temperature | 0 °C.... + 40 °C | | | | | |
| Proposed Temp. to extend battery life | 20 - 25 °C | | | | | |
| Humidity | up to 95% (non-condensing) | | | | | |
| Audible Noise at 1 m | <50 dB | | | | <60 dB | |
| Protection Class | IP 20 | | | | | |
| **PHYSICAL SPECIFICATIONS (tower position)** | | | | | | |
| Net Weight (power module) | 25kg | | 26kg | 28kg | 36 kg | |
| Net Weight (with internal batteries) | 55kg | | 85kg with 9Ah battery | - | - | |
| Dimensions(mm) (HxWxD)-power module | 440x88x680 | | 440x132x680 | | 440x220x720 | |
| Dimensions(mm) (HxWxD)- w/battery vers. | 440x176x680 | | - | | - | |
| **STANDARDS** | | | | | | |
| Standards | EN62040-1-1 (safety); EN62040-2 (EMC);EN62040-3(performance); EN60950-1 | | | | | |
| **ACCESSORIES** | | | | | | |
| | Internal&External SNMP, Dry Contact Board, External Manual Bypass, Rail Kit, External Battery Connection Cable, External Socket Box, External Additional Charging Board Software | | | | | |

** Availability to use 16pcs 12V batteries per string if load is less than 85%

HOME/OFFICE | DATA CENTER | MEDICAL | INDUSTRY | TRANSPORTATION | EMERGENCY

# DSP Flexipower

## 1 Phase In - 1 Phase Out / 3kVA - 10kVA
## 3 Phase In - 1 Phase Out / 10 kVA

- On-Line Double Conversion Technology
- Real Digital Signal Processor (DSP) Controller
- Power Factor Correction
- High output power factor
- Parallel redundant operation up to 4 units (excluding 3kVA)
- Integrated Manual Bypass (excluding 3kVA)
- Low total harmonic distortion (THD) level
- Transformerless Design
- High Performance with the PWM Sinewave Topology
- Cold Start Function
- Intelligent Battery Management System extends the life time of batteries
- Overload, Overheat & Short Circuit Protections
- Emergency Shutdown Control through EPO
- User Friendly Multi-Functional LED/LCD Display Panel
- Energy Saving Mode (ECOMODE)
- RS232 Communication Port & Management Software
- Internal SNMP, Dry contact and RS485 card options
- Possible to operate as 50Hz/60Hz Frequency Converter
- Extended Back up time with External Battery Cabinet

VFI TYPE | TOWER | LCD | SERVICE

UPS ONLINE | TOWER | LCD DISPLAY (3-10kVA) | SERVICE

## TECHNICAL SPECIFICATIONS

| MODEL | FP1103 | FP1105 | FP1106 | FP1108 | FP1110 | FP3110 |
|---|---|---|---|---|---|---|
| Power (kVA) | 3 | 5 | 6 | 8 | 10 | 10 |
| Power (kW) | 2,4 | 4,5 | 5,4 | 7,2 | 9 | 9 |
| **INPUT** | | | | | | |
| Phase Configuration | 1Ph + N + PE | | | | | 3Ph + N + PE |
| Nominal Voltage | 220V/230/240V | | | | | 380V/400V/415V |
| Minimum Voltage | 160 V | 180 V | | | | 320 V |
| Maximum Voltage | 288 V | 280 V | | | | 485 V |
| Frequency | ± 5 Hz | 45 - 65 Hz | | | | |
| Power Factor | 0,99 | | | | | |
| **OUTPUT** | | | | | | |
| Power Factor | 0,8 | 0,9 | | | | |
| Phase Configuration | 1Ph + N + PE | | | | | |
| Nominal Voltage | 220V / 230 / 240V (adjustable) | | | | | |
| Wave Form | Pure Sine Wave | | | | | |
| Total Harmonic Distortion at 100% linear load | <3% | | | | | |
| Frequency | 50Hz or 60Hz (adjustable) | | | | | |
| Frequency Tolerance (free running) | ±0,2 % | | | | | |
| Static Voltage Regulation (0%-100% load) | <1% | | | | | |
| Crest Factor | 3:1 | | | | | |
| Transfer Time | 0 sec | | | | | |
| Overload | 30 sec @ (%106-%120) | 2min @ (%100-%120) | | | | |
| | 10 sec @ (%120-%150) | 30sec @ (%120-%150) | | | | |
| | Transfers to Bypass @%150 | | | | | |
| Total Efficiency | ≥90% | ≥92% | | | | |
| **BATTERY** | | | | | | |
| Type | Maintenance-free lead acid batteries | | | | | |
| Recharge Time (for Internal Battery) | 4-6h up to 90% | | | | | |
| Quantity per String | 6pcs 12V Batteries | 20 pcs 12V Batteries | | | | |
| Voltage | 72 VDC | 240VDC | | | | |
| Internal Batteries (Optional) | 7Ah, 9Ah | | | | | |
| Cold Start | Present | | | | | |
| **DISPLAY** | | | | | | |
| LED + LCD Display | Line Mode, Back up Mode, Eco Mode, Bypass Supply, Battery Low, Battery Bad/Disconnect, Overload, UPS Fault, Interruption during transfer | | | | | |
| LCD display | Input Voltage, Input Frequency, Output Voltage, Output Frequency, Load%, Battery Voltage, Internal Temperature | | | | | |
| Self Diagnostics | Upon Power On, Front Panel Setting and Through Software Control, 24h routine Check | | | | | |
| **PROTECTION** | | | | | | |
| Overload Protection | Bypass transfer time is calculated by simulating a temperature related model of a fuse | | | | | |
| Short Circuit Protection | Acts as the ideal current source during the short circuit time | | | | | |
| Other Protection | Against excessive (heat, voltage, current) intense battery discharge | | | | | |
| **COMMUNICATION** | | | | | | |
| Interface (Communication ports) | Standard RS232 port and optional RS485, Internal SNMP, Dry Contact Cards | | | | | |
| **ENVIRONMENT** | | | | | | |
| Operating Temperature | 0 °C.... + 40°C | | | | | |
| Proposed Temp. to extend battery life | 20 - 25 °C | | | | | |
| Humidity | up to 95% (non-condensing) | | | | | |
| Audible Noise at 1 m | <50 dB | | | | | <52 dB |
| Protection Class | IP 20 | | | | | |
| **PHYSICAL SPECIFICATIONS** | | | | | | |
| Dimensions(mm) (HxWxD) | 449x226x454 | 585x254x710 | | | | |
| Weight - without battery (kg) | 19 | 30 | | 38 | | 45 |
| **STANDARDS** | | | | | | |
| Standards | EN62040-1-1 (Safety); EN62040-2 (EMC) | | | | | |
| **ACCESSORIES** | | | | | | |
| Optional | Internal&External SNMP, Dry Contact Board, Monitoring and Management Software, Internal Battery Holder Apparatus, Additional Charging Set | | | | | |

HOME/OFFICE | DATA CENTER | MEDICAL | INDUSTRY | TRANSPORTATION | EMERGENCY

# DSP Multipower

3 Phase In - 1 Phase Out / 15kVA – 20kVA

- On-Line Double Conversion Technology
- Real Digital Signal Processor (DSP) Controller
- Paralel redundant operation up to 4 units (Optional)
- Increased Input Power Factor (0,95)
- Transformerless Design
- Cold Start Function
- Overload, Overheat & Short Circuit Protections
- User Friendly Multi-Functional LED/LCD Display Panel
- Energy Saving Mode (GREEN MODE)
- Intelligent Battery Management System
- RS232 Communication Port & Management Software
- SNMP, Dry Contact, RS485, USB Card options

VFI TYPE | UPS ONLINE | TOWER | RACK | LCD DISPLAY (15-20kVA) | SERVICE

## TECHNICAL SPECIFICATIONS

| MODEL | DSPMP-3115T | DSPMP-3120T |
|---|---|---|
| Power (kVA) | 15 | 20 |
| Power (kW) | 13,5 | 18 |
| **INPUT** | | |
| Phase Configuration | 3Ph + N + PE (Hardwire) | |
| Nominal Voltage | 380VAC/400VAC /415VAC | |
| Minimum Voltage (at 75% Load) | 277VAC | |
| Maximum Voltage | 485VAC | |
| Frequency | 45-65 Hz | |
| Power Factor (@linear load) | 0,95 | |
| **OUTPUT** | | |
| Power Factor | 0,9 | |
| Phase Configuration | 1Ph + N + PE (Hardwire) | |
| Nominal Voltage | 220VAC/230VAC/240VAC | |
| Wave Form | Pure Sine Wave | |
| Total Harmonic Distortion at 0 to 100% linear load | <3% | |
| Frequency | 50Hz or 60Hz (adjustable) | |
| Frequency Tolerance (free running) | ±0,2% | |
| Frequency Synchronized Range | ±1Hz or ±3Hz (selectable) | |
| Voltage Regulation | ±2% | |
| Crest Factor | 3 | |
| Transfer Time | 0sec | |
| Total Efficiency | > 91% | |
| Greenmode Efficiency | > 95% | |
| **BATTERY** | | |
| Type | Maintenance-free lead acid batteries | |
| Voltage | 240VDC | |
| Quantity per string | 20pcs 12V Batteries | |
| Built in max. Charge Current | 4A | |
| **DISPLAY** | | |
| LED + LCD Display | Line Mode, Backup Mode, ECO Mode, Bypass Supply, Battery Low, Battery Bad/Disconnect, Overload and Transferring with Interruption & UPS Fault | |
| LCD display | Input Voltage, Input Frequency, Output Voltage, Output Current, Output Frequency, Load Percentage, Battery Voltage & Inner Temperature. | |
| Self Diagnostics | Upon Power-on, Front Panel Setting & Software Control, 24-hour routine checking | |
| Audible and Visual Alarms | Line Failure, Battery Low, Transfer to Bypass, System Fault Conditions | |
| **COMMUNICATION** | | |
| Interface (Communication ports) | Standard RS232 port and optional RS485, Internal SNMP, Dry Contact Cards | |
| **ENVIRONMENT** | | |
| Operating Temperature | 0 °C - 40 °C | |
| Proposed Temp. to extend battery life | 20 - 25 °C | |
| Humidity | up to 95% (non-condensing) | |
| Audible Noise at 1 m | <60 dB | |
| Protection Class | IP 20 | |
| **PHYSICAL SPECIFICATIONS** | | |
| Net Weight | 60kg | 62kg |
| Dimensions (mm) (WxDxH) | 290x650x770 | |
| **STANDARDS** | | |
| Standards | EN62040-1-1 (Safety); EN62040-2 (EMC); EN62040-3 (Performance); EN60950-1 | |
| **ACCESSORIES** | | |
| Optional | Internal&External SNMP, Dry Contact Board, External Manual Bypass, External Battery Connection Cable, External Additional Charging Board Software | |

HOME/OFFICE | DATA CENTER | MEDICAL | INDUSTRY | TRANSPORTATION | EMERGENCY

# Saver Plus DSP

## 3 Phase In - 1 Phase Out / 15kVA - 20kVA

- On-line 'double conversion' technology
- Real Digital Signal Processor (DSP) controlled, IGBT technology
- Wide input voltage range (140V-480V)
- Input Power Factor Correction PFC (>0,97)
- Intelligent Battery Management System extends the life time of batteries
- Transformerless Design
- Small Dimensions
- Manual Bypass
- LCD display
- RS 232 and relay interface
- Management and monitoring software available for all operating systems and SNMP support

VFI TYPE — UPS ONLINE | TOWER | LCD — LCD DISPLAY (15-20kVA) | SERVICE — SERVICE

## TECHNICAL SPECIFICATIONS

| MODEL | SD3115 | SD3120 |
|---|---|---|
| Power | 15kVA | 20kVA |
| **INPUT** | | |
| Nominal Voltage | 380 V / 400V / 415V 3Phase, N | |
| Minimum Voltage | 140V 3Phase, N | |
| Minimum Voltage (at full load) | 260V 3Phase, N | |
| Maximum Voltage | 480V 3Phase, N | |
| Frequency | 50 - 60Hz (45 to 65 Hz) | |
| Nominal Current | 17,4 A / phase | 23,3 A / phase |
| Maximum Current | 53 A peak / phase | 71 A peak / phase |
| Power Factor | >0,97 | |
| **OUTPUT** | | |
| Power Factor | 0,7 | |
| Nominal Voltage | 220V / 230V (adjustable) | |
| Wave Form | Sinus | |
| Total Harmonic Distortion | < 3% | |
| Frequency | 50Hz or 60Hz (adjustable) | |
| Voltage Regulation (Static) | 1% | |
| Crest Factor | 3 | |
| Overload | > 30s (at 150 % load) | |
| Total Efficiency | > 91% | |
| **BATTERY** | | |
| Type | Maintenance-free lead acid batteries | |
| Quantity per string | 32pcs 12V Batteries | |
| Voltage | 384VDC | |
| Recharge Time for Internal Batteries | < 4 h | |
| Discharge Current | < 10% | |
| Internal Batteries (Optional) | 12Ah | |
| Warning | Audible Buzzer through the end of Battery Discharge | |
| **DISPLAY** | | |
| LED Panel | Line, Bypass, Battery, Inverter, Overload, Fault Indicators | |
| LCD Panel | Load%, Battery Temperature, Input&Output&Battery Voltages, Output Frequency | |
| **STATIC BY-PASS** | | |
| Voltage Tolerance | 10% (adjustable) | |
| Frequency Tolerance | 3Hz (adjustable) | |
| Transfer Time | 0 ms | |
| **PROTECTION** | | |
| Protections | Overload Protection, Short Circuit Protection, High Temperature, Over Voltage, Over Current | |
| **COMMUNICATION INTERFACE** | | |
| Interface (Communication Ports) | RS 232 | |
| Dry Contact Signals | Ups shutdown, mains failure, low battery, by-pass active, summary alarm | |
| **ENVIRONMENT** | | |
| Temperature | 0 - 40 °C | |
| Suggested Temp. to extend battery life | 20 - 25 °C | |
| Humidity | up to 95% (non-condensing) | |
| Audible Noise (from 1m distance) | < 55 dB | |
| Protection Class | IP 20 | |
| **PHYSICAL SPECIFICATIONS** | | |
| Net Weight - without battery (kg) | 103,5 | 108 |
| Dimensions (mm) (WxDxH) | 430x870x970 | |
| **STANDARDS** | | |
| Standards | EN 62040-1-1 (Safety), EN 62040-2 (EMC) | |
| **ACCESSORIES** | | |
| Optional | External SNMP, Monitoring and Management Software, Remote Monitoring Panel, Additional Charging Set, Internal Galvanic Isolation Transformer | |

HOME/OFFICE DATA CENTER MEDICAL INDUSTRY TRANSPORTATION EMERGENCY

# FORTE

## 3 Phase In – 3 Phase Out / 10kVA – 250kVA
## 3 Phase In – 1 Phase Out / 10kVA – 40kVA

- 3 Level IGBT Rectifier & Inverter Technology
- Real Digital Signal Processor (DSP) controlled transformerless design
- High Output Power Factor (PF:1, kVA=kW)
- Increased AC-AC Efficiency (up to 96,5%)
- Unity Input Power Factor (p.f. > 0,99)
- Low Input Current THD (<4%)
- Low Output Voltage THD (<2%)
- Wide input voltage range
- Built-in Static & Manual Bypass
- Soft Start Feature
- Parallel connection availability up to 8 units
- Adjustable Battery Qty with optional DC-DC Charger/Booster at 10-15-20kVA Compact version
- Intelligent battery management system extends the life time of batteries
- Colorful Graphical Multi-Functional TouchScreen LCD Panel
- Event Log Display up to 500 Events
- Advanced communication possibility via RS232
- MODBUS connection through RS 485
- Generator Port for Generator Friendly Operation
- EPO Port for Emergency Power Off
- 50/60Hz Frequency Converter Operation Mode (Adjustable from LCD Panel)
- Management and monitoring software available for all operating systems
- Communication with computers and network systems through Optional SNMP
- Optional Programmable 4pcs Relays for dry contact signals
- Compact dimension

VFI TYPE — UPS ONLINE | TOWER | LCD — LCD DISPLAY (10-250kVA) | SERVICE — SERVICE

**High Efficiency, Real Economy**

- High efficiency of up to 96,5%, reduces the operational cost and provides significant energy saving.
- Continuous Operation, Unique Operational Efficiency, Minimized occupied Installation Area, Maximum Power Delivery, Reduced Infrastructure Material Cost (cable, transformer, generator), Low Cooling Expenses, Optimized TCO (Total Cost of Ownership) features of FORTE guarantees fast return of your investment.

10-20kVA COMPACT | 10-30kVA | 40-60kVA | 80-100kVA | 120-250kVA

# FORTE

## TECHNICAL SPECIFICATIONS

| MODEL (380-400-415V 3ph version) | FORTE 33010 | FORTE 33015 | FORTE 33020 | FORTE 33030 | FORTE 33040 | FORTE 33060 | FORTE 33080 | FORTE 33100 | FORTE 33120 | FORTE 33160 | FORTE 33200 | FORTE 33250 |
|---|---|---|---|---|---|---|---|---|---|---|---|---|
| Power (kVA) | 10 | 15 | 20 | 30 | 40 | 60 | 80 | 100 | 120 | 160 | 200 | 250 |
| Active Power (kW) | 10 | 15 | 20 | 30 | 40 | 60 | 80 | 100 | 120 | 160 | 200 | 250 |
| **MODEL (200-208-220V 3Ph version)** | **FORTE U33005** | **FORTE U33007** | **FORTE U33010** | **FORTE U33015** | **FORTE U33020** | **FORTE U33030** | **FORTE U33040** | **FORTE U33050** | **FORTE U33060** | **FORTE U33080** | **FORTE U33100** | **FORTE U33125** |
| Power (kVA) | 5 | 7.5 | 10 | 15 | 20 | 30 | 40 | 50 | 60 | 80 | 100 | 125 |
| Active Power (kW) | 5 | 7.5 | 10 | 15 | 20 | 30 | 40 | 50 | 60 | 80 | 100 | 125 |
| **INPUT** | | | | | | | | | | | | |
| Phase | 3Ph+N+PE | | | | | | | | | | | |
| Nominal Voltage | 380V / 400V / 415V | | | | | | | | | | | |
| Voltage Range (%100 Load) | (-15%) (+20%) | | | | | | | | | | | |
| Voltage Range (%50 Load) | (-45%) (+20%) | | | | | | | | | | | |
| Nominal Frequency (Hz) | 50 or 60 | | | | | | | | | | | |
| Frequency Range (Online Mode) | 45-65Hz | | | | | | | | | | | |
| Input Current THD* | <4% | | | | | | | | | | | |
| Input Power Factor | 0,99 | | | | | | | | | | | |
| **OUTPUT** | | | | | | | | | | | | |
| Output Power Factor | 1 | | | | | | | | | | | |
| Phase | 3Ph+N+PE | | | | | | | | | | | |
| Nominal Voltage | 380V / 400V / 415V (adjustable via display) | | | | | | | | | | | |
| Static Voltage Regulation @%100 Linear Load | <%1 | | | | | | | | | | | |
| Output Voltage THD* (Online&Battery Mode) | < % 2 (Linear Load) | | | | | | | | | | | |
| Crest Factor | 3:1 | | | | | | | | | | | |
| Frequency (Hz) | 50 Hz / 60 Hz | | | | | | | | | | | |
| Frequency Range | ± %0.01 (Battery Mode) | | | | | | | | | | | |
| Overload | "Online – Battery Mode: <%125 Load 10 min, <%150 Load 1 min<br>BypassMode: <%200 continous" | | | | | | | | | | | |
| Efficiency* | up to 96.5% (Online) , 98.5% (ECO MODE) | | | | | | | | | | | |
| **STATIC BYPASS LINE** | | | | | | | | | | | | |
| Phase | 3Ph+N+PE | | | | | | | | | | | |
| Bypass Voltage Range | 380V / 400V / 415V (adjustable via display: -%15 +%12) | | | | | | | | | | | |
| Bypass Frequency Range | 47 Hz - 53 Hz (adjustable) | | | | | | | | | | | |
| **BATTERY** | | | | | | | | | | | | |
| Type | Maintenance-Free Lead Acid Batteries | | | | | | | | | | | |
| Charge Current (A) | Nominal Charge Current x 0,1 (adjustable via display) | | | | | | | | | | | |
| Battery QTY STANDARD | 60 | | | | | | | | | | | |
| Battery QTY for FORTE-U version | 34 | | | | | | | | | | | |
| Internal Battery QTY STANDARD | 60pcs 12V 7-9Ah | | | | | | | | | | | |
| Battery QTY COMPACT | 20 - 52 | 30 - 52 | 36 - 52 | | | | | | | | | |
| Battery Protection | Deep Decharge Protection, Temperature-compensated Battery Charging | | | | | | | | | | | |
| Battery Test | Standard (Automatic & Manual) | | | | | | | | | | | |
| **FRONT DISPLAY PANEL** | | | | | | | | | | | | |
| Display | 3.5" TFT Touch Screen with UPS Operation Modes & Energy Flow Diagram | | | | | | | | | | | |
| Color Graphic Touch Screen TFT | Load %, Input / Output / Bypass Voltage, Output Power (W & VA), Output Current, Output Power Factor, Battery ± Voltage, Input / Output Frequency, DC Bus ± Voltage, Back-up Time, Internal Temperature | | | | | | | | | | | |
| Event Log | 500pcs (details can be checked via display) | | | | | | | | | | | |
| **COMMUNICATION** | | | | | | | | | | | | |
| Interface (Communication Port) | RS232 & RS485 MODBUS & SNMP (optional) | | | | | | | | | | | |
| Dry Contact Signals (Optional) | 4pcs Relays configurable to ; " General Alarm", "Input Failure", "Battery Failure", "Output Failure", "Bypass Active", "Output Overload", | | | | | | | | | | | |
| Others as standard | High Temperature" Dry contact signals | | | | | | | | | | | |
| **ENVIRONMENTAL** | | | | | | | | | | | | |
| Storage Temperature (°C) | '-25°C - +70°C (15 - 40°C recomended for longer battery life time) | | | | | | | | | | | |
| Operating Temperature (°C) | 0 - 40°C (20 - 25 °C recomended for longer battery life time) | | | | | | | | | | | |
| Relative Humidity | 0-%95 (non-condensing) | | | | | | | | | | | |
| Operating Altitude (maximum m.) | 1000 m | | | | | | | | | | | |
| Protection Class | IP20 | | | | | | | | | | | |
| Standards | EN 62040-1 (Safety), EN 62040-2 (EMC), EN 62040-3 (Performance), EN 60950 | | | | | | | | | | | |
| **PHYSICAL SPECIFICATIONS** | FORTE 33010 U33005 | FORTE 33015 U33007 | FORTE 33020 U33010 | FORTE 33030 U33015 | FORTE 33040 U33020 | FORTE 33060 U33030 | FORTE 33080 U33040 | FORTE 33100 U33050 | FORTE 33120 U33060 | FORTE 33160 U33080 | FORTE 33200 U33100 | FORTE 33250 U33125 |
| Dimensions (WxDxH) (cm) - STANDARD | 40 x 75 x 110 | | | | 52 x 89 x 131 | | 67x77x165 | | 85 x 80 x 185 | | | |
| Weight (w/o battery) kg - STANDARD | 100 | 114 | 116 | 122 | 180 | 202 | 253 | 285 | 405 | 522 | 570 | 600 |
| Dimensions (WxDxH) (cm) - COMPACT | 27 x 80 x 103 | | | | | | | | | | | |
| Weight (w/o battery) kg - COMPACT | 75 | 79 | 81 | | | | | | | | | |
| **OPTIONS** | | | | | | | | | | | | |
| Parallel Kit, Internal/External SNMP, Split Bypass, Remote Monitoring Panel, Isolation Transformer, Battery Cabinet, Backfeed Protection | | | | | | | | | | | | |

* May vary depending on UPS power & Load & Environental Conditions.

HOME/OFFICE DATA CENTER MEDICAL INDUSTRY TRANSPORTATION EMERGENCY

# Pyramid DSP Premium

## 3 Phase In – 3 Phase Out / 10 – 400kVA

- High Output Power Factor : 0,9
- Graphical Touch Screen Front Display Panel
- IGBT Rectifier
- Real Digital Signal Processor (DSP) controlled transformerless design
- Input Power Factor Correction PFC(>0,99)
- Low Total Harmonic Distortion Level (THDi ≤ 4%)
- High Efficiency (up to 94%)
- Wide Input Voltage Range
- Generator Compatible Operation
- Evolution and redundancy guaranteed by on site Modular Parallel Systems
- Intelligent battery management system extends the lifetime of batteries
- Static and Manual Bypass
- EPO (Emergency Power Off)
- Communication with computers and network systems with SNMP availability
- Expandable battery blocks
- Low installation and operating costs
- Different voltage applications with refer to country mains characteristic

VFI TYPE — UPS ONLINE | TOWER | LCD — LCD DISPLAY (10-400kVA) | SERVICE — SERVICE

**ACCESSORIES**

**Communication**
- Remote Monitoring Panel &25m Cable For Remote Panel
- UPSMAN (Management Software)
- Multiserver Shutdown Licence
- Internal SNMP kit :
  Internal Slot Card SNMP CS141BSC or CY504,
  slot box, cable
- External Adapter
  SNMP Adapter Net Agent Mini DY 522
  SNMP Adapter CS141BL

**Other**
- Split By-pass
- Parallel Kit
- Drawer Type Internal Battery Shelves 10 - 30kVA
- Special Battery Connection Cable for Drawer Type Shelves

**Battery Cabinets**
- UPS looking battery Cabinets (different battery configuration available)
  V14, V15, V24, V33, V34

- Eco Cabinets (different battery configurations available)
  BC00, BC10, BC20, BC30, BC40, BC50, BC60

# Pyramid DSP Premium

## TECHNICAL SPECIFICATIONS

| MODEL | PDSP-P 33010 | PDSP-P 33015 | PDSP-P 33020 | PDSP-P 33030 | PDSP-P 33040 | PDSP-P 33060 | PDSP-P 33080 | PDSP-P 33100 | PDSP-P 33120 | PDSP-P 33160 | PDSP-P 33200 | PDSP-P 33250 | PDSP-P 33300 | PDSP-P 33400 |
|---|---|---|---|---|---|---|---|---|---|---|---|---|---|---|
| Output power (kVA) | 10 | 15 | 20 | 30 | 40 | 60 | 80 | 100 | 120 | 160 | 200 | 250 | 300 | 400 |
| Nominal Active Power (kW) | 9 | 13,5 | 18 | 27 | 36 | 54 | 72 | 90 | 108 | 144 | 180 | 225 | 270 | 360 |
| **INPUT** | | | | | | | | | | | | | | |
| Number of phases | 3Ph+N+PE | | | | | | | | | | | | | |
| Nominal Voltage (3ph Phase to Phase) | 380V/400V/415V | | | | | | | | | | | | | |
| Voltage range | (-15)% (+27)% | | | | | | | | | | | | | |
| Voltage range (%64 load) | (-45)% (+27)% | | | | | | | | | | | | | |
| Voltage range (%42 load) | (-64)% (+27)% | | | | | | | | | | | | | |
| Nominal Frequency (Hz) | 50 or 60 | | | | | | | | | | | | | |
| Frequency range for online operation | ±10% | | | | | | | | | | | | | |
| Input Current THD | ≤4% (*) (**) | | | | | | | | | | | | | |
| Input Power Factor | 0,99 | | | | | | | | | | | | | |
| **OUTPUT** | | | | | | | | | | | | | | |
| Power factor | 0.9 | | | | | | | | | | | | | |
| Number of phases | 3Ph+N+PE | | | | | | | | | | | | | |
| Voltage (3ph Phase to Phase) | 380V/400V/415V | | | | | | | | | | | | | |
| Static Voltage Regulation at %100 Linear Load (online&battery mode) | <1% | | | | | | | | | | | | | |
| Voltage THD at rated linear load | <3% | | | | | | | | | | | | | |
| Crest factor | 3:1 | | | | | | | | | | | | | |
| Frequency (Hz) | 50 or 60 | | | | | | | | | | | | | |
| Free Running Frequency (Hz) | ± 0.01% | | | | | | | | | | | | | |
| Overload | 125% for 10 minutes<br>150% for 1 minute | | | | | | | | | | | | | |
| Efficiency | up to 94% (**) | | | | | | | | | | | | | |
| **BATTERY** | | | | | | | | | | | | | | |
| Type | Maintenance-free Lead Acid Batteries | | | | | | | | | | | | | |
| Quantity (pcs) | 62 (2*31) | | | | | | | | | 60 (2*30) | | | | |
| Battery Protection | Deep Discharge Protection with Auto Cut off, Temperature Voltage Compensated Charge | | | | | | | | | | | | | |
| Battery Test | Standard (Automatic and Manual) | | | | | | | | | | | | | |
| **DISPLAY** | | | | | | | | | | | | | | |
| 3.5" Graphical Touch Screen | Graphical Flow Diagram for Line, Rectifier, Bypass, Battery, Inverter and Load<br>Input & Output Frequency, Voltage & Current, Load Power Factor, Load%, Load Active & Apparent Power, Bypass Voltage & Frequency, Battery Voltage, Current & Temperature, Autonomy Time (min), | | | | | | | | | | | | | |
| **STATIC BYPASS** | | | | | | | | | | | | | | |
| Number of phases | 3Ph+N+PE | | | | | | | | | | | | | |
| Voltage Range for bypass operation | ± 10% | | | | | | | | | | | | | |
| Frequency Range for bypass operation (Hz) | ± 6% (Configurable) | | | | | | | | | | | | | |
| **COMMUNICATION** | | | | | | | | | | | | | | |
| Interface (Communication Ports) | RS232, RS485 (ModBus) | | | | | | | | | | | | | |
| Relay Contact Signals (Adjustable) | Programmable 4 Relay Contacts to any of following signals ;<br>General Alarm, Input Failure, Battery Failure, Output Failure, Bypass Acvite, Output Overload, High Temperature | | | | | | | | | | | | | |
| Others | EPO, Generator Interface | | | | | | | | | | | | | |
| **ENVIRONMENT** | | | | | | | | | | | | | | |
| Storage Temperature Range (°C) | -25 to +55 (15 to 40 recomended for longer battery life time) | | | | | | | | | | | | | |
| Operating Temperature Range (°C) | 0 to 40 (20 to 25 recomended for longer battery life time) | | | | | | | | | | | | | |
| Relative Humidity Range | 0-95% (non-condensing) | | | | | | | | | | | | | |
| Maximum Altitude without derating (m) | 1000 | | | | | | | | | | | | | |
| Protection Level | IP20 | | | | | | | | | | | | | |
| Audible Noise Level from 1m (dBA) | 50 | | 52 | | 55 | | 58 | 60 | 62 | | 67 | | | |
| **PHYSICAL SPECIFICATIONS** | | | | | | | | | | | | | | |
| Output power (kVA) | 10 | 15 | 20 | 30 | 40 | 60 | 80 | 100 | 120 | 160 | 200 | 250 | 300 | 400 |
| Dimensions WxDxH (cm) | 40 x 78 x 107 | | | | 52 x 90 x 130 | 67 x 73 x 163 | | 85 x 78 x 182 | 98x87x195 | | 134x108x205 | | | |
| Weight (kg) | 100 | 114 | 116 | 122 | 180 | 253 | 285 | 405 | 522 | 570 | 830 | 865 | 900 | 1070 |
| **STANDARDS** | | | | | | | | | | | | | | |
| Standards | EN 62040-1-1 (Safety), EN 62040-2 (EMC), EN 62040-3 (VFI-SS-111) | | | | | | | | | | | | | |

(*) for source having THDv < 2 % @ nominal load
(**) varies depending on ups power

HOME/OFFICE DATA CENTER MEDICAL INDUSTRY TRANSPORTATION EMERGENCY

# Pyramid DSP

## 3 Phase In - 3 Phase Out / 10 - 400kVA
## 3 Phase In - 1 Phase Out / 10 - 40kVA

- IGBT Rectifier
- Real Digital Signal Processor (DSP) controlled transformerless design
- Input Power Factor Correction PFC(>0,99)
- Low Total Harmonic Distortion Level (THDi ≤ 4%)
- High Efficiency (up to 94%)
- Wide Input Voltage Range
- Generator Compatible Operation
- Evolution and redundancy guaranteed by on site Modular Parallel Systems
- Intelligent battery management system extends the lifetime of batteries
- Static and Manual Bypass
- Optional Galvanic isolation transformer
- Communication with computers and network systems with SNMP availability
- Expandable battery blocks
- Low installation and operating costs
- Different voltage applications with refer to country mains characteristic;
  PDSP version for 380/400/415V(Ph_Ph) applications
  PDSP-U version for 200/208/220V(Ph_Ph) applications
  Special voltage applications other than stated values
- EPO (Emergency Power Off)

VFI TYPE — UPS ONLINE
TOWER
LCD — LCD DISPLAY (10-400kVA)
SERVICE — SERVICE

* 3 phase in 1 phase out version is available (10 to 40 kVA) (380-400-415V version)
* 50/60 Hz Frequency Converter version is available

### ACCESSORIES

**Communication**
- Remote Monitoring Panel &25m Cable For Remote Panel
- UPSMAN (Management Software)
- Multiserver Shutdown Licence
- Internal SNMP kit :
  Internal Slot Card SNMP CS141BSC or CY504, slot box, cable
- External Adapter
  SNMP Adapter Net Agent Mini DY522
  SNMP Adapter CS141BL
  SNMP Adapter with Modbus CS141LM

**Other**
- Split By-pass
- Parallel Kit
- Drawer Type Internal Battery Shelves 10 - 30kVA
- Special Battery Connection Cable for Drawer Type Shelves

**Battery Cabinets**
UPS looking battery Cabinets (different battery configuration available)
- V14, V15, V24, V33, V34

Eco Cabinets (different battery configurations available)
- BC00, BC10, BC20, BC30, BC40, BC50, BC60

*TESID Innovation and Creativity Reward 2005*

# Pyramid DSP

## TECHNICAL SPECIFICATIONS

| MODEL (380-400-415V 3ph version) | PDSP 33010 | PDSP 33015 | PDSP 33020 | PDSP 33030 | PDSP 33040 | PDSP 33060 | PDSP 33080 | PDSP 33100 | PDSP 33120 | PDSP 33160 | PDSP 33200 | PDSP 33250 | PDSP 33300 | PDSP 33400 |
|---|---|---|---|---|---|---|---|---|---|---|---|---|---|---|
| Output power (kVA) | 10 | 15 | 20 | 30 | 40 | 60 | 80 | 100 | 120 | 160 | 200 | 250 | 300 | 400 |
| Nominal Active Power (kW | 8 | 12 | 16 | 24 | 32 | 48 | 64 | 80 | 96 | 128 | 160 | 200 | 240 | 320 |
| **MODEL (200-208-220V 3Ph version)** | **PDSP-U33005** | **PDSP-U33007** | **PDSP-U33010** | **PDSP-U33015** | **PDSP-U33020** | **PDSP-U33030** | **PDSP-U33040** | **PDSP-U33050** | **PDSP-U33060** | **PDSP-U33080** | **PDSP-U33100** | **PDSP-U33125** | **PDSP-U33150** | **PDSP-U33200** |
| Output power (kva) | 5 | 7,5 | 10 | 15 | 20 | 30 | 40 | 50 | 60 | 80 | 100 | 125 | 150 | 200 |
| Nominal Active Power (kW) | 4 | 6 | 8 | 12 | 16 | 24 | 32 | 40 | 48 | 64 | 80 | 100 | 120 | 160 |
| **INPUT** | | | | | | | | | | | | | | |
| Number of phases | 3Ph+N+PE | | | | | | | | | | | | | |
| Nominal Voltage (Ph-Ph) | 380V / 400V / 415V (PDSP) & 200V / 208V / 220V (PDSP-U) | | | | | | | | | | | | | |
| Voltage range (%100 load) | (-15)% (+27)% @PYRAMID DSP / ±15% @PYRAMID DSP-U | | | | | | | | | | | | | |
| Voltage range (%64 load) | (-45)% (+27)%@PYRAMID DSP | | | | | | | | | | | | | |
| Voltage range (%42 load) | (-64)% (+27)%@PYRAMID DSP | | | | | | | | | | | | | |
| Nominal Frequency (Hz) | 50 or 60 | | | | | | | | | | | | | |
| Frequency range for online operation | ±10% | | | | | | | | | | | | | |
| Input Current THD | ≤4% (*) (**) | | | | | | | | | | | | | |
| Input Power Factor | 0,99 | | | | | | | | | | | | | |
| **OUTPUT** | | | | | | | | | | | | | | |
| Power factor | 0.8 | | | | | | | | | | | | | |
| Number of phases | 3Ph+N+PE (PDSP & PDSP-U) / 1Ph+N+PE (1Ph ver.) | | | | | | | | | | | | | |
| Voltage (3ph_ Phase to Phase) | 380V/400V/415V (PDSP) & 200V / 208V / 220V (PDSP-U) / 220 / 230 /240V (1 ph ver.) | | | | | | | | | | | | | |
| Static Voltage Regulation at %100 Linear Load (online&battery mode) | <1% | | | | | | | | | | | | | |
| Voltage THD at rated linear load | <3% | | | | | | | | | | | | | |
| Crest Factor | 3:1 | | | | | | | | | | | | | |
| Frequency (Hz) | 50 or 60 | | | | | | | | | | | | | |
| Free Running Frequency (Hz) | ± 0.01% | | | | | | | | | | | | | |
| Overload | 125% for 10 minutes | | | | | | | | | | | | | |
| | 150% for 1 minute | | | | | | | | | | | | | |
| Efficiency | up to 94% (**) | | | | | | | | | | | | | |
| **BATTERY** | | | | | | | | | | | | | | |
| Type | Maintenance-free lead acid batteries | | | | | | | | | | | | | |
| Quantity (pcs) PDSP version | 62 (2*31) | | | | | | | | | 60 (2*30) | | | | |
| Quantity (pcs) PDSP-U version | 34 (2*17) | | | | | | | | | | | | | |
| Battery Protection | Deep Discharge Protection with Auto Cut off | | | | | | | | | | | | | |
| Battery Test | Standard (Automatic and Manual) | | | | | | | | | | | | | |
| **DISPLAY** | | | | | | | | | | | | | | |
| LED Display | Line, Bypass, Battery, Inverter, Load, Fault Indications | | | | | | | | | | | | | |
| LCD Display | Load%, Input & Output Frequency, Voltage & Current, Bypass voltage, Battery Voltage & Current, Temperature, Alarms | | | | | | | | | | | | | |
| **STATIC BYPASS** | | | | | | | | | | | | | | |
| Number of phases | 3Ph+N+PE | | | | | | | | | | | | | |
| Voltage Range for bypass operation | ± 10% | | | | | | | | | | | | | |
| "Frequency Range for bypass operation (Hz)" | ± 6% (Configurable) | | | | | | | | | | | | | |
| **COMMUNICATION** | | | | | | | | | | | | | | |
| Interface (Communication Ports) | RS232 or RS485 & Modbus (optional) | | | | | | | | | | | | | |
| Dry Contact Signals (optional) | AC failure, Battery under voltage, bypass operation, output failure | | | | | | | | | | | | | |
| Others | EPO, Generator interface | | | | | | | | | | | | | |
| **ENVIRONMENT** | | | | | | | | | | | | | | |
| Storage Temperature Range (°C) | -25 to +55 (15 to 40 recomended for longer battery life time) | | | | | | | | | | | | | |
| Operating Temperature Range (°C) | 0 to 40 (20 to 25 recomended for longer battery life time) | | | | | | | | | | | | | |
| Relative Humidity Range | 0-95% (non-condensing) | | | | | | | | | | | | | |
| Maximum Altitude without derating (m) | 1000 | | | | | | | | | | | | | |
| Protection Level | IP20 | | | | | | | | | | | | | |
| **PHYSICAL SPECIFICATIONS** | **PDSP 33010 U33005** | **PDSP 33015 U33007** | **PDSP 33020 U33010** | **PDSP 33030 U33015** | **PDSP 33040 U33020** | **PDSP 33060 U33030** | **PDSP 33080 U33040** | **PDSP 33100 U33050** | **PDSP 33120 U33060** | **PDSP 33160 U33080** | **PDSP 33200 U33100** | **PDSP 33250 U33125** | **PDSP 33300 U33150** | **PDSP 33400 U33200** |
| Dimensions wxdxh (cm) | 40 x 78 x 107 | | | | 52 x 90 x 130 | | 67x73x163 | | 85x78x182 | 98x87x195 | | 134x108x195 | | |
| Weight (kg) | 100 | 114 | 116 | 122 | 180 | 202 | 253 | 285 | 405 | 522 | 570 | 735 | 750 | 825 |
| **STANDARDS** | | | | | | | | | | | | | | |
| Standards | EN 62040-1-1 (safety), EN 62040-2(EMC), EN 62040-3 (VFI-SS-111) | | | | | | | | | | | | | |
| (*) for source having THDv < 2 % @ nominal load (**) varies depending on ups power | | | | | | | | | | | | | | |

HOME/OFFICE DATA CENTER MEDICAL INDUSTRY TRANSPORTATION EMERGENCY

# Pyramid DSP T

## 3 Phase In - 3 Phase Out / 10 – 300kVA

- IGBT Rectifier
- Real Digital Signal Processor (DSP) controlled
- Built in Inverter Output Isolation Transformer
- Input Power Factor Correction PFC(>0,99)
- Low Total Harmonic Distortion Level (THDi ⩽ 4%) and (THDv < 1.5%)
- Wide Input Voltage Range
- Generator Compatible Operation
- Evolution and redundancy guaranteed by on site Modular Parallel Systems
- Intelligent battery management system extends the lifetime of batteries
- Synchronization Capability with external sources
- Static and Manual Bypass
- Communication with computers and network systems with SNMP availability
- Expandable battery blocks
- Low installation and operating costs
- EPO (Emergency Power Off)

VFI TYPE UPS ONLINE | TOWER | LCD DISPLAY (1-300kVA) | SERVICE

**ACCESSORIES**

**Communication**
- Remote Monitoring Panel &25m Cable For Remote Panel
- UPSMAN (Management Software)
- Multiserver Shutdown Licence
- Internal SNMP kit :
  Internal Slot Card SNMP CS141BSC or CY504, slot box, cable
- External Adapter
  SNMP Adapter Net Agent Mini DY 522
  SNMP Adapter CS141BL
  SNMP Adapter with Modbus CS141LM

**Other**
- Split By-pass
- Parallel Kit

**Battery Cabinets**
UPS looking battery Cabinets (different battery configuration available)
- V14, V15, V24, V33, V34

Eco Cabinets (different battery configurations available)
- BC00, BC10, BC20, BC30, BC40, BC50, BC60

# Pyramid DSP T

## TECHNICAL SPECIFICATIONS

| MODEL | PDSP-T 33010 | PDSP-T 33015 | PDSP-T 33020 | PDSP-T 33030 | PDSP-T 33040 | PDSP-T 33060 | PDSP-T 33080 | PDSP-T 33100 | PDSP-T 33120 | PDSP-T 33160 | PDSP-T 33200 | PDSP-T 33250 | PDSP-T 33300 |
|---|---|---|---|---|---|---|---|---|---|---|---|---|---|
| Output Power (kVA) | 10 | 15 | 20 | 30 | 40 | 60 | 80 | 100 | 120 | 160 | 200 | 250 | 300 |
| Active Power (kW) | 8 | 12 | 16 | 24 | 32 | 48 | 64 | 80 | 96 | 128 | 160 | 200 | 240 |
| **INPUT** | | | | | | | | | | | | | |
| Number of Phases | 3Ph + N + PE | | | | | | | | | | | | |
| Nominal Voltage (Ph-Ph) | 380V/400V/415V | | | | | | | | | | | | |
| Voltage range (100% load) | -15% ~ +27% | | | | | | | | | | | | |
| Voltage range (64% load) | -45% ~ +27% | | | | | | | | | | | | |
| Voltage range (42% load) | -64% ~ +27% | | | | | | | | | | | | |
| Nominal Frequency (Hz) | 50 or 60 ±10% | | | | | | | | | | | | |
| Input Current THD | 4% (*) (**) | | | | | | | | | | | | |
| Input Power Factor | 0,99 | | | | | | | | | | | | |
| **OUTPUT** | | | | | | | | | | | | | |
| Output Power factor | 0.8 | | | | | | | | | | | | |
| Number of Phases | 3Ph + N + PE | | | | | | | | | | | | |
| Voltage | 380V/400V/415V | | | | | | | | | | | | |
| Static Voltage Regulation at %100 Linear Load (online&battery mode) | <1% | | | | | | | | | | | | |
| Voltage THD at rated linear load | <1.5% | | | | | | | | | | | | |
| Crest factor | 3:1 | | | | | | | | | | | | |
| Free Running Frequency (Hz) | 50 or 60 ± 0.01% | | | | | | | | | | | | |
| Overload | 125% for 10 minutes; 150% for 1 minute | | | | | | | | | | | | |
| Efficiency | ≥ 90% (**) | | | | | | | | | | | | |
| **STATIC BYPASS** | | | | | | | | | | | | | |
| Voltage Range | 380V / 400V (Ph-Ph) ± 10% | | | | | | | | | | | | |
| "Frequency Range for bypass operation (Hz)" | ±6% (Adjustable) | | | | | | | | | | | | |
| **BATTERY** | | | | | | | | | | | | | |
| Type | Maintenance-free lead acid batteries | | | | | | | | | | | | |
| Battery Quantity (pcs) | 54 (2 x 27) | | | | | | | | | | | | |
| Battery Protection | Deep discharge Protection with Auto Cut off | | | | | | | | | | | | |
| Battery Test | Standard (Automatic and Manual) | | | | | | | | | | | | |
| **COMMUNICATION** | | | | | | | | | | | | | |
| Interface (Communication Ports) | RS232&485@ 10 to 120kVA / RS232&422 @ 160 to 300kVA | | | | | | | | | | | | |
| Dry Contact Signals (optional) | AC Failure, Battery Under Voltage, Bypass Operation, Output Failure | | | | | | | | | | | | |
| Others | EPO, Generator Interface | | | | | | | | | | | | |
| **ENVIRONMENT** | | | | | | | | | | | | | |
| Storage Temperature Range (°C) | -25 to +55 (15 to 40 recommended for longer battery life) | | | | | | | | | | | | |
| Operating Temperature Range (°C) | 0 to 40 (20 to 25 recommended for longer battery life) | | | | | | | | | | | | |
| Relative Humidity Range | Up to 95% (non-condensing) | | | | | | | | | | | | |
| Maximum Altitude without derating (m) | < 1000 | | | | | | | | | | | | |
| Protection Class | IP20 | | | | | | | | | | | | |
| **PHYSICAL SPECIFICATIONS** | **PDSP-T 33010** | **PDSP-T 33015** | **PDSP-T 33020** | **PDSP-T 33030** | **PDSP-T 33040** | **PDSP-T 33060** | **PDSP-T 33080** | **PDSP-T 33100** | **PDSP-T 33120** | **PDSP-T 33160** | **PDSP-T 33200** | **PDSP-T 33250** | **PDSP-T 33300** |
| Dimensions (WxDxH) cm | 40 x 78 x 107 | | | | 52 x 90 x 130 | | 64x100x140 | | 76 x 102,5x 168,5 | 96x108x182 | | 161x108x195 | |
| Weight (kg) | 235 | | 238 | 273 | 450 | 502 | 625 | 680 | 790 | 1200 | 1290 | 1675 | 1775 |
| **STANDARDS** | | | | | | | | | | | | | |
| | EN 62040-1-1 (safety), EN 62040-2(EMC), EN 62040-3 (VFI-SS-111) | | | | | | | | | | | | |

(*) for source having THDv < 2 % @ nominal load (**) varies depending on ups power

HOME/OFFICE DATA CENTER MEDICAL INDUSTRY TRANSPORTATION EMERGENCY

# Modulera

## Modular UPS 3 Phase In - 3 Phase Out / 20 - 200 kVA

- Hot Swappable Decentralized Parallel Architecture
- DSP (Digital Signal Processor) Controlled Technology
- Modular N+X Parallel Redundancy
- Plug & Play Type Hot Swappable Power Modules
- Cold Start Function
- Parallel connection availability of UPS Frames up to 4pcs
- Wide Input Voltage Window (208Vac ~ 478Vac)
- Wide input frequency range (40Hz – 70Hz)
- High Overall Efficiency (up to 94%)
- Increased Output Power Factor (0.9)
- Unity Input Power Factor (0.99)
- Low Input Total Harmonic Distortion Level (THDi down to 3 %)
- Fit into standard 19" Rack Cabinet
- Touch-screen LCD display for user's friendly operation
- EPO (Emergency Power Off)
- Smart Fan Speed Control
- Programmable Battery Voltage (32/ 34 / 36 / 38 / 40 blocks of 12V Batteries)
- Three Level Battery Charge system with smart charge current adjustment
- Powerful charger built in each Modular UPS Power Module
- Equip with Maintenance Bypass Switch for easy maintenance
- RS232 & 485 Ports as standard communication
- Megatec/Mod Bus protocol supported
- Optional Communication Interfaces (SNMP Card or DRY contact board)

VFI TYPE — UPS ONLINE | MODULAR SYSTEM | LCD DISPLAY (20-200kVA) | SERVICE

# Modulera

## TECHNICAL SPECIFICATIONS

| MODEL | | MDL 3300-60K | MDL 3300-100K | MDL 3300-200K |
|---|---|---|---|---|
| Frame Capacity | | 20kVA (18kW) to 60kVA (54kW) | 20kVA (18kW) to 100kVA (90kW) | 20kVA (18kW) to 200kVA (180kW) |
| MDL Module Capacity | | 20KVA/18KW | | |
| **INPUT** | | | | |
| Phase | | 3 Phase + Neutral + Ground | | |
| Rated Voltage | | 380 / 400 / 415Vac | | |
| Voltage Range | | 208 - 478Vac at 50% load, 305 - 478Vac at 100% load | | |
| Frequency range | | 40Hz - 70Hz | | |
| Power Factor | | ≥ 0.99 | | |
| Current THDi | | down to 3% | | |
| Generator Input | | Present | | |
| **OUTPUT** | | | | |
| Phase | | 3 Phase + Neutral + Ground | | |
| Rated Voltage | | 380/400/415Vac | | |
| Power Factor | | 0,9 | | |
| Voltage Regulation | | ±1% | | |
| Frequency | Utility Mode | ±1%, ±2%, ±4%, ±5%, ±10% of the rated frequency(optional) | | |
| | Battery Mode | (50/60 ±%0.2)Hz | | |
| Crest Factor | | 3:1 | | |
| THDv | | ≤2% with linear load | | |
| Waveform | | Pure Sinewave | | |
| Over Load | AC Mode | 100% - 110%: 60min,110% - 125%: 10min, 125% - 150%: 1min, | | |
| | | ≥150%: immediately transfers to bypass | | |
| | Bat. Mode | 100% - 110%: 60min,110% - 125%: 10min, 125% - 150%: 1min, | | |
| | | ≥150%: immediately shutdown | | |
| | Bypass Mode | Breaker (40Amp) | | |
| AC-AC Efficiency | | Up to 94% | | |
| Eco-Mode Efficiency | | 97% | | |
| **BATTERY** | | | | |
| Type | | Maintenance-free lead acid batteries | | |
| Quantity (12V VRLA batteries) | | Configurable to 32/34/36/38/40 pcs per string | | |
| Voltage (12V VRLA batteries) | | 384/408/432V/456V/480V DC | | |
| Charging Current | Frame | 18A Max. (charge current can be set according to battery capacity installed) | 30A Max. (charge current can be set according to battery capacity installed) | 60A Max. (charge current can be set according to battery capacity installed) |
| | MDL Module | 6A Max. (charge current can be set according to battery capacity installed) | | |
| **DISPLAY** | | | | |
| Status LED & LCD | | Line Mode, Eco Mode, Bypass Mode, Battery Low, Battery Bad, Overload & UPS Fault | | |
| Reading On the LCD | | Input Voltage, Input Frequency, Output Voltage, Output Frequency, Load Percentage, Battery Voltage & Inner Temperature | | |
| **PROTECTION** | | | | |
| Short Circuit | | Hold Whole System | | |
| Overheat | | Line Mode: Switch to Bypass; Backup Mode: Shut down UPS immediately | | |
| Battery Low | | Alarm and Switch off | | |
| Self-diagnostics | | Upon Power On and Software Control | | |
| EPO (optional) | | Shut down UPS immediately | | |
| Battery | | Advanced Battery Management | | |
| Noise Suppression | | Complies with EN62040-2 | | |
| Alarms | | Line Failure, Battery Low, Overload, System Fault | | |
| **COMMUNICATION** | | | | |
| Standard | | 1xRS232 Communication port, 2xRS485 Communication ports, 1xModBus port, 2xCommunication Slot | | |
| Optional | | SNMP (Megatec Protocol), Dry Contact Board, EPO | | |
| **ENVIRONMENT** | | | | |
| Operating Temperature | | 0°C - 40°C | | |
| Storage Temperature | | -25°C - 55°C | | |
| Humidity | | 0 - %95 non condensing | | |
| Altitude | | < 1500m | | |
| Noise | | <60dBA (at 1 meter) | | |
| **PHYSICAL SPECIFICATIONS** | | | | |
| Dimesions (WxDxH) | MDL Module | 443 x 580 x 131- 3U (for all frames) | | |
| | Frame | 600x840x1400 | | 600x1100x2000 |
| Weight - Without Batteries (kg) | MDL Module | 31 | | |
| | Frame | 150 | 152 | 290 |
| **STANDARDS** | | | | |
| CE, EN/IEC 62040-2, EN/IEC 62040-1-1, EN/IEC 62040-3 (VFI SS 111) | | | | |

HOME/OFFICE DATA CENTER MEDICAL INDUSTRY TRANSPORTATION EMERGENCY

# Frequency Converter

## 3 Phase In - 3 Phase Out / 10 - 120kVA

- Double conversion and PWM technology with pure sinewave output,
- Microprocessor controller,
- Galvanic Isolation,
- Efficiency up to 91%,
- Emergency close switch connection,
- User friendly front panel (5 buttons and LCD indicator), detailed information
- availability to do the adjustment of parameters through front panel,
- History log of 128 events, calendar and time indicators,
- High performance at non-linear loads,
- Remote monitoring via network,
- SNMP compatibility,
- 10 Years spare parts supply warranty,
- Low installation and operating cost

## TECHNICAL SPECIFICATIONS

| MODEL | FC 3310 | FC 3315 | FC 3320 | FC 3330 | FC 3340 | FC 3360 | FC 3380 | FC 33100 | FC 33120 |
|---|---|---|---|---|---|---|---|---|---|
| Output Power kVA | 10 | 15 | 20 | 30 | 40 | 60 | 80 | 100 | 120 |
| Output Power Kw | 8 | 12 | 16 | 24 | 32 | 48 | 64 | 80 | 96 |
| Power factor | 0.8 | | | | | | | | |
| **INPUT** | | | | | | | | | |
| Voltage | 400 VAC or 380VAC 3phase , 4Wire + G | | | | | | | | |
| Tolerance | ±10% | | | | | | | | |
| Frequency | 50 / 60Hz | | | | | | | | |
| Tolerance | ±5% | | | | | | | | |
| Power factor | 0,8 | | | | | | | | |
| max RFI | EN 50091-2 Class A | | | | | | | | |
| **OUTPUT** | | | | | | | | | |
| Voltage | 208VAC, 3Phase, 4Wire+G | | | | | | | | |
| Voltage Stability | static (balanced load) : +/-2% | | | | | | | | |
| | static (unbalanced load) : +/-4% | | | | | | | | |
| | Dynamic (0% - 100%step load) : +/-6% | | | | | | | | |
| Uptum Time | after 0%-100% step load: max 25m sec | | | | | | | | |
| Crest factor | 3:1 | | | | | | | | |
| Frequency | 400 Hz | | | | | | | | |
| Frequency Tolerance | ±0.2% | | | | | | | | |
| Overload 101% - 110% load | 1h | | | | | | | | |
| Overload 130% load | 10min. | | | | | | | | |
| Overload 150% load | 1min. | | | | | | | | |
| Overall Efficiency | up to 91% | | | | | | | | |
| Total Harmonic Distortion | <3% at linear load | | | | | | | | |
| | <5% at non-linear load | | | | | | | | |
| **COMMUNICATION** | | | | | | | | | |
| Interface | RS232 and Dry Contact, | | | | | | | | |
| **PHYSICAL** | | | | | | | | | |
| Weight without battery (kg) | 240 | 255 | 270 | 285 | 490 | 570 | 600 | 750 | 810 |
| Dimensions (mm) WxDxH | 490x650x1190 | | | | 565x820x1400 | | 720x800x1450 | 1192x874x1720 | |
| **ENVIRONMENT** | | | | | | | | | |
| Audible Noise | <55dBA | | | | | <60dBA | | 63 to 66dBA | |
| Operating Temperature | 0-40°C | | | | | | | | |
| Relative Humidity (non condensing) | 0-95% | | | | | | | | |
| Max. Altitude | <1000m | | | | | | | | |
| Standards | EN 50091-1 (safety), EN 50091-2 (EMC), IEC 62040-3 (class VFI), IP20 | | | | | | | | |

# AVR Series

## One Phase 2-30kVA and Three Phase 6-1000kVA

- Servo Motor Controlled Technology
- Fast Response for Fluctuations
- Reliable Stabilization for Secure Energy
- High efficiency in each model
- Short circuit protection
- Ability to work with non-linear loads
- Manual Bypass Switch
- Wide input voltage range version (optional)
- Electro-mechanic (breaker module) high-low voltage protection (optional)
- Output Isolation Transformer (optional)
- Digital Display option available
- Higher IP applications are available
- Phase Independent Voltage Regulation for Three Phase Models
- Surge Arrester option available

Options (available for all power range)
Digital Display
Breaker Module (provides phase missing and low/high voltage protection)
Wide Voltage Range Model available (135 - 245V (L-N) for Single Phase, 233 - 424V (L-L) for Three Phase)

## TECHNICAL SPECIFICATIONS

| MODEL | POWER | Dimensions | Weight | Response | Input | | Output | | | | | | ENVIRONMENT | | |
|---|---|---|---|---|---|---|---|---|---|---|---|---|---|---|---|
| SINGLE PHASE | (kVA) | WxDxH(cm) | (kg) | V/Sn | Voltage (V) L-N | Max Current | Voltage (V)* L-N | Phase | Frequency | THD | Efficiency(%) | Max Current | Temp. | Audible Noise | Humidity |
| e-0201 | 2 | 25 x 50 x 29,5 | 21 | 80 | 160-245 | 10,5A | 220/230/240±%2 | 1 Ph+N | same as input | w/o distortion, no affect on harmon-ics | ≥ 95 | 7.3A | 0-40°C | <45dBA | 0-95% |
| e-0351 | 3.5 | 25 x 50 x 29,5 | 26 | 80 | 160-245 | 19A | 220/230/240±%2 | 1 Ph+N | | | ≥ 96 | 12,7A | 0-40°C | <45dBA | 0-95% |
| e-0501 | 5 | 50,5 x 39 x 28,5 | 37 | 80 | 160-245 | 27A | 220/230/240±%2 | 1 Ph+N | | | ≥ 96 | 19.4A | 0-40°C | <45dBA | 0-95% |
| e-0751 | 7.5 | 50,5 x 39 x 28,5 | 46 | 80 | 160-245 | 39A | 220/230/240±%2 | 1 Ph+N | | | ≥ 96 | 29A | 0-40°C | <45dBA | 0-95% |
| e-1001 | 10 | 53,5 x 44,5 x 35 | 61 | 80 | 160-245 | 53A | 220/230/240±%2 | 1 Ph+N | | | ≥ 96 | 39A | 0-40°C | <45dBA | 0-95% |
| e-1501 | 15 | 36,5 x 62 x 64 | 85 | 80 | 160-245 | 79A | 220/230/240±%2 | 1 Ph+N | | | ≥ 96 | 58A | 0-40°C | <45dBA | 0-95% |
| e-2001 | 20 | 49,5 x 73 x 77,5 | 136 | 80 | 160-245 | 106A | 220/230/240±%2 | 1 Ph+N | | | ≥ 96 | 74A | 0-40°C | <45dBA | 0-95% |
| e-3001 | 30 | 49,5 x 73 x 77,5 | 160 | 80 | 160-245 | 159A | 220/230/240±%2 | 1 Ph+N | | | ≥ 96 | 111A | 0-40°C | <45dBA | 0-95% |
| THREE PHASE | (kVA) | WxDxH(cm) | (kg) | V/Sn | Voltage (V) L-L | Max Current | Voltage (V)* L-L | Phase | Frequency | THD | Efficiency(%) | Max Current | Temp. | Audible Noise | Humidity |
| e-0603 | 6 | 39,5 x 53,5 x 88 | 77,5 | 80 | 277-424 | 3x10,5A | 380/400/415±%2 | 3 Ph+N | same as input | w/o distortion, no affect on har-monics | ≥ 95 | 3x7.2A | 0-40°C | <50dBA | 0-95% |
| e-1053 | 10,5 | 39,5 x 53,5 x 88 | 90 | 80 | 277-424 | 3x19A | 380/400/415±%2 | 3 Ph+N | | | ≥ 96 | 3x12,7A | 0-40°C | <50dBA | 0-95% |
| e-1503 | 15 | 39,5 x 58 x 91,5 | 130 | 80 | 277-424 | 3x27A | 380/400/415±%2 | 3 Ph+N | | | ≥ 96 | 3x19.4A | 0-40°C | <50dBA | 0-95% |
| e-2253 | 22,5 | 39,5 x 58 x 91,5 | 144 | 80 | 277-424 | 3x39A | 380/400/415±%2 | 3 Ph+N | | | ≥ 96 | 3x29A | 0-40°C | <50dBA | 0-95% |
| e-3003 | 30 | 44,5 x 68,5 x 102,5 | 196 | 80 | 277-424 | 3x53A | 380/400/415±%2 | 3 Ph+N | | | ≥ 97 | 3x39A | 0-40°C | <50dBA | 0-95% |
| e-4503 | 45 | 44,5 x 68,5 x 102,5 | 226 | 80 | 277-424 | 3x79A | 380/400/415±%2 | 3 Ph+N | | | ≥ 97 | 3x58A | 0-40°C | <50dBA | 0-95% |
| e-6003 | 60 | 54,5 x 103 x 131,5 | 360 | 80 | 277-424 | 3x106A | 380/400/415±%2 | 3 Ph+N | | | ≥ 97 | 3x74A | 0-40°C | <50dBA | 0-95% |
| e-7503 | 75 | 54,5 x 103 x 131,5 | 390 | 80 | 277-424 | 3x131A | 380/400/415±%2 | 3 Ph+N | | | ≥ 97 | 3x91A | 0-40°C | <50dBA | 0-95% |
| e-9003 | 90 | 54,5 x 103 x 131,5 | 455 | 80 | 277-424 | 3x158A | 380/400/415±%2 | 3 Ph+N | | | ≥ 97 | 3x110A | 0-40°C | <50dBA | 0-95% |
| e-11003 | 110 | 61,5 x 114,5 x 153 | 486 | 80 | 277-424 | 3x191A | 380/400/415±%2 | 3 Ph+N | | | ≥ 97 | 3x133A | 0-40°C | <50dBA | 0-95% |
| e-12003 | 120 | 61,5 x 114,5 x 153 | 500 | 80 | 277-424 | 3x210A | 380/400/415±%2 | 3 Ph+N | | | ≥ 97 | 3x146A | 0-40°C | <50dBA | 0-95% |
| e-15003 | 150 | 61,5 x 114,5 x 153 | 584 | 80 | 277-424 | 3x265A | 380/400/415±%2 | 3 Ph+N | | | ≥ 97 | 3x182A | 0-40°C | <50dBA | 0-95% |
| e-22003 | 220 | 88,5 x 180,5 x 142,5 | 960 | 80 | 277-424 | 3x387A | 380/400/415±%2 | 3 Ph+N | | | ≥ 97 | 3x269A | 0-40°C | <50dBA | 0-95% |
| e-27003 | 270 | 88,5 x 180,5 x 142,5 | 1200 | 80 | 277-424 | 3x470A | 380/400/415±%2 | 3 Ph+N | | | ≥ 97 | 3x327A | 0-40°C | <50dBA | 0-95% |
| e-36003 | 360 | 110 x 210 x 157 | 2045 | 80 | 277-424 | 3x633A | 380/400/415±%2 | 3 Ph+N | | | ≥ 97 | 3x438A | 0-40°C | <50dBA | 0-95% |
| e-40003 | 400 | 110 x 210 x 157 | 2300 | 80 | 277-424 | 3x688A | 380/400/415±%2 | 3 Ph+N | | | ≥ 97 | 3x484A | 0-40°C | <50dBA | 0-95% |
| e-50003 | 500 | 184,5 x 135,5 x 152 | 2740 | 80 | 277-424 | 3x877A | 380/400/415±%2 | 3 Ph+N | | | ≥ 97 | 3x610A | 0-40°C | <50dBA | 0-95% |
| e-60003 | 600 | 250,5 x 151 x 186,5 | 2910 | 80 | 277-424 | 3x1031A | 380/400/415±%2 | 3Ph + N | | | ≥ 97 | 3x727A | 0-40°C | <50dBA | 0-95% |
| e-80003 | 800 | 322,5 x 170 x 163 | 3600 | 80 | 277-424 | 3x1375A | 380/400/415±%2 | 3Ph + N | | | ≥ 97 | 3x970A | 0-40°C | <50dBA | 0-95% |
| e-100003 | 1000 | 322,5 x 170 x 163 | 3800 | 80 | 277-424 | 3x1758A | 380/400/415±%2 | 3Ph + N | | | ≥ 97 | 3X1223A | 0-40°C | <50dBA | 0-95% |

* ±1% to ±5% adjustable at Digital Version

- Inform AVR is used with any computer system, fax and photocopy machines, industrial, medical, laboratory, office appliances and household for secure energy.
Inform AVR protects your load from all fluctuations of the mains voltage and regulates it.
- It disconnects the output voltage electro-mechanically when an increase or decrease occurs that is out of limits and prevents all the possible problems by electronic protection (optional).
- The booster transformer and sensitive variac do the voltage regulation.
- Servo system is based on the control of DC motor by thyristor.
- Output voltage is observed by analogue or digital display (optional). Over current protection is ensured by magnetic switch and inside cooling is assured by natural cooling or fan depending on power. In single- phase models special inside structure and natural cooling is applied. Connections of the unit are done by NK model Terminals.
- Phase protection, which is operated optionally, disconnects the output during low or high voltage value, and if there is no phase, again disconnects the output voltage by contactor. In order to avoid the possible problems that can be caused by sudden voltage fluctuations, Inform AVR includes a time relay, which can take the control in 2 seconds. It has a by-pass switch and on/off property.
- Wide voltage range models may be produced upon request. The standard voltage range of these models may be altered upon request.
- Digital Version enables monitoring of the following parameters;
- Input/Output Voltage, Output Current (optional), output frequency
It also has Regulator in operation, output voltage high / low LED indicators
- Digital AVR provides output is present (Regulator in operation) & Output voltage high / low dry contact alarm signals.


# Infocharger

## 25-200 A

- Microprocessor Controller
- IGBT Technology (ICH Series)
- PFC Technology (ICC Series)
- Transformerless Design
- Wide Input Voltage Range
- Operation according to constant voltage and current principle
- Adjustable Boost and Nominal Charge Voltage
- Adjustable Output Current
- High Voltage, Over Current, Short Circuit Protections
- Over Temperature Protection
- Alphanumerical LCD Display and Control Panel
- Low DC Voltage Protection (LVD) - Optional
- Dry Contact Alarms- Optional
- Parallel Connection Availability at ICH Series - Optional
- Small Footprints, Compact Size

ICC Series

ICH Series

## TECHNICAL SPECIFICATIONS

| TYPE | ICC2460 | ICC4830 | ICC11015 | ICH2450 | ICH24100 | ICH24200 | ICH4850 | ICH48100 | ICH11025 | ICH11050 |
|---|---|---|---|---|---|---|---|---|---|---|
| Power | 60Amp | 30Amp | 15Amp | 50Amp | 100Amp | 200Amp | 50Amp | 100Amp | 25Amp | 50Amp |
| DC Voltage | 24VDC | 48VDC | 110VDC | 24VDC | | | 48VDC | | 110VDC | |
| **INPUT** | | | | | | | | | | |
| Input Phase | 1Phase | | | 1phase / 3Phase | | | | | | |
| Nominal Voltage Range | 90-265VAC | | | 176-280VAC (Ph - N) | | | | | | |
| Frequency Range | 50/60Hz ± 10% | | | | | | | | | |
| Power Factor | >0,98 | | | >0,8 | | | | | | |
| **OUTPUT** | | | | | | | | | | |
| Nominal Voltage | 24VDC | 48VDC | 110VDC | 24VDC | | | 48VDC | | 110VDC | |
| Nominal current | 60Amp | 30Amp | 15Amp | 50Amp | 100Amp | 200Amp | 50Amp | 100Amp | 25Amp | 50Amp |
| Output Current Adjustment value | 0 to 60A | 0 to 30A | 0 to 15A | 0 to 50A | 0 to 100A | 0 to 200A | 0 to 50A | 0 to 100A | 0 to 25A | 0 to 50A |
| Max Output Current | 110% of Inominal | | | | | | | | | |
| Boost Charge Voltage | 100% - 120% of the nominal output voltage | | | | | | | | | |
| Output Fluctuation | <1% rms AC Output Voltage | | | | | | | | | |
| Dynamic Response | less than 2% of output voltage | | | | | | | | | |
| Output protection | electronic short circuit / over voltage | | | | | | | | | |
| **DISPLAY** | | | | | | | | | | |
| LCD Display Panel | Voltage, Current, Temperature, Charge and Status Informations | | | | | | | | | |
| LED Display Panel | Overload, Line, Battery, Load, LVD, Fault Indications | | | | | | | | | |
| **GENERAL** | | | | | | | | | | |
| Cooling | Forced (FAN Cooling) | | | | | | | | | |
| Isolation Voltage | 2000VAC between output and chassis | | | | | | | | | |
| Efficiency | 90% | | | | | | | | | |
| Operating Temperature | 0 – 40 °C | | | | | | | | | |
| Relative Humidity | 0% - 95% | | | | | | | | | |
| Input/Output Connections | Terminals | | | | | | | | | |
| Fuses | input, load and Battery | | | | | | | | | |
| **PHYSICAL SPECIFICATIONS** | | | | | | | | | | |
| Net Weight (kg) | 11,6 | | | 35 | | | | | | |
| Dimensions (mm) (WxDxH) | 250x420x280 | | | 265x556x560 | | | | | | |
| **STANDARDS** | | | | | | | | | | |
| Safety | EN62040-1-1 | | | | | | | | | |
| EMC | EN62040-2 | | | | | | | | | |
| Performance | EN62040-3 | | | | | | | | | |
| Protection Class | IP 20 | | | | | | | | | |
| **OPTIONS** | | | | | | | | | | |
| Dry Contact Card | 9pcs contact alarms (NO/NC) | | | 8pcs contact alarms (NO/NC) | | | | | | |
| LVD | Low Voltage Disconnect (Contactor) | | | | | | | | | |
| Parallel Connection | Not Available | | | up to 7 units | | | | | | |

# Battery Charger

5-700 A

- Microprocessor controlled Thyristor Technology
- Built in input transformer topology
- Fully Adjustable float, boost and equalizing charge modes with V/I characteristics
- Advanced technology for phase control
- Very low voltage ripple and extended battery life
- High efficiency and low operation cost
- Ability to operate as voltage or current source
- Wide range of options for monitoring
- Improved environmental operation characteristics
- Remote monitoring via RS232 communication port
- Potential free alarm contacts on extended alarm board
- Internal Over Temperature protection
- User Friendly Control Panel

## TECHNICAL SPECIFICATIONS

| DC Voltage | 24VDC | 48VDC | 110VDC | 220VDC |
|---|---|---|---|---|
| **INPUT** | | | | |
| Input Phase | 1Phase/3Phase | | | |
| Nominal Voltage Range | 1x220V or 1x230V / 3x380V or 3x400V ± 15 % – 2 / 4 wire | | | |
| Frequency Range | 47-63Hz | | | |
| **OUTPUT** | | | | |
| Nominal Voltage | 24VDC | 48VDC | 110VDC | 220VDC |
| 1Ph Nominal current | 60A | 15A/30A/40A/60A | 5A/20A/30A/40A/60A/80A/100A/120A/150A | 15A/30A/40A/60A |
| 3Ph Nonimal current | 30A/60A/100A/150A/ 200A/250A/400A | 10A/30A/60A/100A/ 150A/200A/250A | 30A/60A/100A/150A/ 200A/ 250A/300A/400A/ 500A/700A | 30A/60A/100A/150A/ 200A/250A/300A/400A/ 500A/700A |
| Max Output Current | 110% of nominal | | | |
| Float Charge Adjustment Range | 80% - 115% of the nominal output voltage | | | |
| Boost Charge Voltage | 80% - 125% of the nominal output voltage | | | |
| Equalizing Charge Adjustment Range | 80% - 125% of the nominal output voltage | | | |
| Current Limit Adjustment Range | 25% - 100% of the nominal output voltage | | | |
| Voltage Ripple | < 1% (with or without battery) | | | |
| Voltage Regulation | < 1% (10% to 100% load) | | | |
| Efficiency | 87% | 89% | 91% | 93% |
| **DISPLAY** | | | | |
| LCD Display Panel | Voltage, Current, Charge and Status Informations | | | |
| LED Display Panel | Line, Operation, Fault Indications | | | |
| **GENERAL** | | | | |
| Charger Mode | Automatic / Manual U-I Characteristic | | | |
| Charger Type | Float / Boost / Equalizing Charge | | | |
| Cooling | Forced Cooling with Thermic Controlled Fan | | | |
| Input/Output Connections | Terminals | | | |
| Fuses | Semiconductor Type | | | |
| **ENVIRONMENT** | | | | |
| Operating Temperature | -5 – +50 °C | | | |
| Relative Humidity | 0% - 95% | | | |
| Protection Class | IP 20 (Higher IP Class is optional) | | | |
| **STANDARDS** | | | | |
| Standards | 89/336/EEC (EMC); 62040-1, 62040-2, 62040-3, IEC 950, IEC 439, IEC 146 | | | |
| **OPTIONS** | | | | |
| Dry Contact Card | 4pcs contact alarms / normally(closed/open /Modbus) | | | |
| Parallel Connection | Available | | | |
| Others | Earth Leakage Monitoring, Dc Supply & Battery Monitoring, Gauges, Load Voltage Limitation Module / Voltage Drop, Battery Charge Temperature Compensation, IP Protection, Touch panel, LVD, Fan failure monitoring, AC Input Power measurement, Active parallel current sharing | | | |

HOME/OFFICE DATA CENTER MEDICAL INDUSTRY TRANSPORTATION EMERGENCY

# Info-STS (1 Phase)

1 Phase In - 1 Phase Out / 50 - 100 A

- Uninterruptible transfer between the independent sources
- Synchronous/Asynchronous transfer feature
- "In flight" transfer mode
- RS232/RS485 communication facilities
- Source priority selection
- Automatic and Manual transfer in case of failure on both sources
- Module replacement without interruption under load
- Fast Diagnostic Response with microprocessor controller
- Internal (2 pcs) manual bypass
- Easy Maintenance availability
- Current Distortion level less than 1%
- High Efficiency
- Transfer to the second source in less than 5 ms in case of over low/high voltage values


## TECHNICAL SPECIFICATIONS

| MODEL | STS1050 | STS1100 |
|---|---|---|
| **GENERAL SPECIFICATIONS** | | |
| Nominal Voltage | 220V / 230VAC (Monophase) | |
| Nominal Operation Current | 50A | 100A |
| Transfer Time (Synchronized) | 5ms | |
| **PHYSICAL SPECIFICATIONS** | | |
| Cable Entry | Rear | |
| Air Entry/ Exit | Bottom/Top | |
| Advised Cable Cross Section | 10mm2 | 35mm2 |
| Dimensions WxDxH | (19"x360mmx2U) | (19"x360mmx4U) |
| Weight (kg) | 9kg | 17kg |
| **ENVIRONMENT** | | |
| Max Altitude | 2000m above sea level | |
| Humidity | 0-95% | |
| Operating Temperature | 0-40°C | |
| Audible Noise (from 1m) | <45dBA | |
| Protection Class | IP20 | |
| **STANDARDS** | | |
| Standards | EN 62310-2, EN 62310-1, EN 60950-1 | |

# Info-STS (3 Phase)

## 3 Phase + Neutral In - 3 Phase + Neutral Out / 50 - 600A

- Increased power quality
- Easy monitoring all parameters on LCD display
- Fast microcontroller (32 mips)
- Power blackout protection
- Automatic static switching
- Remote monitoring of input power sources
- Easy static and mechanical transfer between separate input sources
- Remote management of power events
- Power event logging
- Advanced RS232 communication features
- DRY contact alarm interface
- Password protected login system from remote site (time Access)
- Easy front access to all components inside of the STS
- Second protection cover on live circuits which prevents electrical shock
- Input sources protected by fuses
- 3 positioned Maintenance bypass switch which prevents cross currents between input sources
- User adjustable parameters by entering a password.
- Built in real time clock.
- Alarm history (with date and time)
- Automatic transfer test from a remote site or using front panel
- Front panel Lamp test
- External emergency shutdown (EPO) input
- Hot plug construction during maintenance bypass
- High current output tolerance up to 1000%
- Temperature sensor inside the Cabinet
- Fast voltage black-out circuit
- Input phase balance and phase sequence fault detect circuit
- Adjustable Input source frequency lower/upper limits

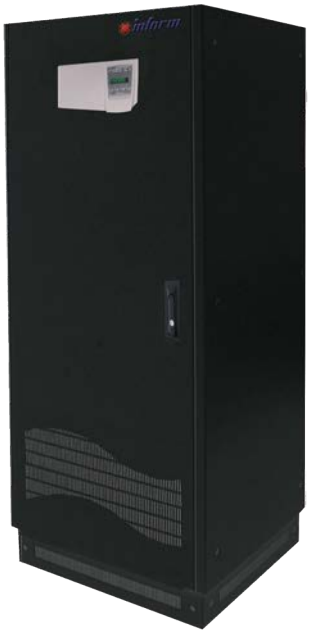

## TECHNICAL SPECIFICATIONS

| MODEL - 3pole<br>MODEL - 4pole | STS3050<br>STS4050 | STS3100<br>STS4100 | STS3150<br>STS4150 | STS3200<br>STS4200 | STS3250<br>STS4250 | STS3300<br>STS4300 | STS3400<br>STS4400 | STS3600<br>STS4600 |
|---|---|---|---|---|---|---|---|---|
| **INPUT** | | | | | | | | |
| Voltage | 380,400VAC, (3 wires for 3pole version And 4 wires for 4pole version) | | | | | | | |
| Voltage Range | 310-430VAC | | | | | | | |
| Frequency | 50 or 60Hz +/-5% | | | | | | | |
| Voltage Distortion | <10% | | | | | | | |
| Input voltage error window | adjustable | | | | | | | |
| Input frequency error window | adjustable | | | | | | | |
| **OUTPUT** | | | | | | | | |
| Current | 50A | 100A | 150A | 200A | 250A | 300A | 400A | 600A |
| Voltage | 380,400VAC, (3 wires for 3pole version And 4 wires for 4pole version) | | | | | | | |
| Crest factor | up to 3,5 | | | | | | | |
| Synchronized transfer time | max 1.8 msec (on 0 current mode) | | | | | | | |
| Non-syncronised transfer time | max 10 msec in 0 current mode, 0-25 sec adjustable in delay mode and in 0 current mode | | | | | | | |
| load power factor range | 0,6 lagging to 0,9 leading | | | | | | | |
| Efficiency | >98% | | | | | | | |
| Overload | 100% to 150% = 1 minute<br>150% to 200% = 10 seconds<br>>200% = 0,5 seconds<br>1000% = 20 msecs | | | | | | | |
| Type of transfer | break before make | | | | | | | |
| As standard | Overcurrent inhibit LCD front panel, MBP | | | | | | | |
| **DISPLAY** | | | | | | | | |
| LCD Display | 2 lines 16 character LCD Display | | | | | | | |
| Monitored Parameters | Source 1 Voltages, Source 2 Voltages, Output Load, Phase Balance, Synchronization Source 1 Frequency, Source 2 Frequency, Phase Angel Degree, Temperature | | | | | | | |
| Indications | 8 LEDs arranged as mimic diagram | | | | | | | |
| Control buttons | 5 push button interactive with LCD panel | | | | | | | |
| Event log | 64 recorded alarm logs from panel or RS232 | | | | | | | |
| **COMMUNICATION** | | | | | | | | |
| Interface (Communication Ports) | RS 232 Standard | | | | | | | |
| Dry contact signals | Output Inhibit Relay, Summary Alarm Relay, Static Or Manual Transfer Relay, S1 /S2 Backfeed Trip Relay, Preferred Source Indicator Relay, Load Is Connected To Alternate Input Source Relay | | | | | | | |
| **GENERAL** | | | | | | | | |
| Neutral connection | available at 4pole version | | | | | | | |
| transfer time | <5msec : within CBEMA & IEEE for synchronized sources <11msec: for unsynchronized sources. | | | | | | | |
| Manual transfer switch | available | | | | | | | |
| **ENVIRONMENT** | | | | | | | | |
| Operating Temperature | 0-40°C | | | | | | | |
| Relative Humidity (non-condensing) | 0-90% | | | | | | | |
| **PHYSICAL SPECIFICATIONS** | | | | | | | | |
| Dimensions (mm) WxDxH | 685x530x1500 | | | 685x570x1770 | | | | 915x735x1935 |
| Weight (kg) | 175 | | | 205 | 215 | 220 | 240 | 340 |
| **STANDARDS** | | | | | | | | |
| Standards | EN 62310-2, EN 62310-1, EN 60950-1 | | | | | | | |

MEDICAL

# Infomips

## Medical Isolation Power Systems

IT Systems are distribution systems which are preferred less compared to Grounded Systems at Industrial Institutions however mandatory to use at Group-2 rooms in hospitals due to the electricity safety that is maintained in compliance to IEC 60364-7-710 Standard. The main difference that discriminates IT systems from Grounded Systems (TN or TT) is the non-presence of the Institution Grounding. This is obtained by isolation transformer and each load that is connected to this distribution system has its own individual grounding. These systems are mainly used in the supply of the hospital critical rooms like surgery, intensive care, premature childbirth, angiography examination rooms.

**Key Features**

- Providing isolation for critical loads especially in emergency &operating rooms in hospitals
- Maintaining the security of doctor and patient
- Preventing the energy interruption
- Displaying the status info of Utility
- 50-500kΩ isolation resistor
- 5-50A Load Current
- Menu adjustment on LCD screen
- Data transmission through RS232/485
- Transfer less than 5ms (with STS)
- Determination of fault location (with IZL CM6X)
- Remote monitoring (with IZL LAP)
- Central Monitoring System (with IZL-LAP/M)
- Customizing the Panel according to project

**MIPS Devices;**

Complete MIPS devices are as follows;

**Standard:**

- Distribution Panel
- Circuit Breakers for output distribution
- Isolation Transformer (comply with IEC 61558-2-15)
- Isolation Monitoring Device (IZL IMM)

**Options:**

- Isolation Error Detection System (IZL CM6X)
- Local & Central Alarm Panel (IZL LAP & IZL LAP/M)
- Static Transfer Switch or Contactor for Change over

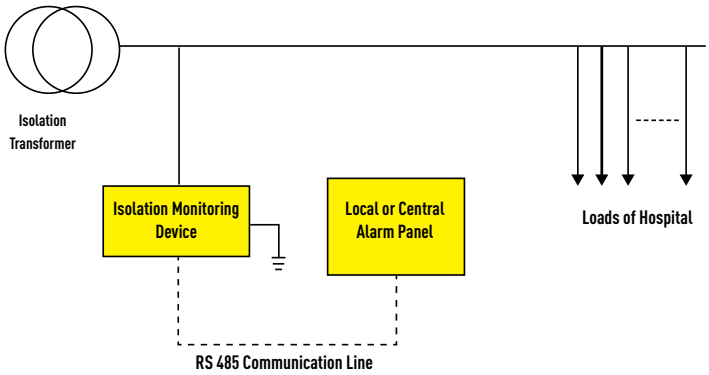


**Benefits of the Isolation System;**

- In the event of first isolation failure, energy blackout does not happen. The security equipment controls the system continuously therefore the energy blackout is prevented.
- The Medical Devices continue their normal operations.
- Fault Currents are reduced to non-critical levels which means the leakage current that is present within the room is reduced from mA levels to µA levels.
- A possible inconvenience in the surgery room is prevented where energy is reserved, and blackout does not happen.

# Battery Cabinets

| | Battery cabinet type | Cabinet model | Capacity | | | | | | | | | | | Cabinet dimensions | | | |
|---|---|---|---|---|---|---|---|---|---|---|---|---|---|---|---|---|---|
| | | | 7-9 AH. | 12AH. | 18 AH. | 25 AH. | 40 AH. | 65 AH. | 80 AH. | 100 AH. | 120 AH. | 150 AH. | 200 AH. | Length | Width | Height | Weight |
|  | BC Cabinets (multi-purpose) | BC 00 | 32 | 22 | 14 | 6 | 6 | | | | | | | 655 | 230 | 530 | 15 |
| | | BC 10 | 64 | 42 | 24 | 12 | 12 | | | | | | | 835 | 246 | 700 | 25 |
| | | BC 20 | 76 | 48 | 32 | 15 | 15 | 6 | 6 | | | | | 957 | 246 | 760 | 30 |
| | | BC 30 | 144 | 96 | 40 | 38 | 32 | 16 | 16 | | | | | 926 | 386 | 1073 | 50 |
| | | BC 40 | 120 | 72 | | 32 | | | | | | | | 828 | 386 | 846 | 35 |
| | | BC 45 | 109 | 72 | 64 | 28 | 24 | | | | | | | 957 | 422 | 800 | 55 |
| | | BC 50 | 240 | 144 | | 64 | 48 | 32 | 32 | 32 | 8 | | | 1566 | 386 | 1166 | 80 |
| | | BC 55 | | | | 78 | 78 | 38 | 38 | 38 | 30 | | | 828 | 386 | 846 | 35 |
| | | BC 60 | | | 90 | 100 | 80 | 64 | 64 | 64 | 45 | 45 | 32 | 1774 | 560 | 1781 | 230 |
| | | BC 65 | | | | 180 | 150 | 90 | 90 | 90 | 60 | 60 | 40 | 828 | 386 | 846 | 35 |
|  | V type PDSP Cabinets | V 14 | | | 62 | 31 | | | | | | | | 400 | 765 | 1070 | 51 |
| | | V 15 | | 62 | | | | | | | | | | 400 | 765 | 1070 | 51 |
| | | V 24 | | | | 32 | 31 | | | | | | | 525 | 880 | 1310 | 64 |
| | | V 33 | | | | | | 35 | 35 | 35 | | | | 835 | 1160 | 1310 | 143 |
| | | V 34 | | | | 93 | 78 | | | | | | | 835 | 1160 | 1310 | 10 |
|  | V type İnformer Cabinets | BC 1000 | | 6 | | | | | | | | | | 135 | 430 | 390 | 10 |
| | | BC 2000 | 8 | | | | | | | | | | | 135 | 470 | 390 | 10 |
| | | BC 3000 | 12 | | | | | | | | | | | 135 | 470 | 390 | 10 |
|  | İnformer Rack Cabinets | RMBC 1000 | | 6 | | | | | | | | | | 483 | 470 | 132 | 10 |
| | | RMBC 2000 | 8 | | | | | | | | | | | 483 | 450 | 132 | 10 |
| | | RMBC 3000 | 12 | | | | | | | | | | | 483 | 512 | 132 | 10 |
|  | V type Saver (plus) DSP Cabinets | BC 1714 | | | 14 | | | | | | | | | 270 | 512 | 685 | 28 |
| | | BC 1426 | | | | 14 | | | | | | | | 270 | 655 | 685 | 30 |
| | | BC 0740 | 40 | | | | | | | | | | | 270 | 655 | 685 | 28 |
| | | BC 1720 | | | 20 | | | | | | | | | 270 | 655 | 685 | 30 |
| | | BC 2620 | | | | 20 | | | | | | | | 390 | 755 | 700 | 46 |
| | | BC 1232 | | 32 | | | | | | | | | | 270 | 655 | 685 | 30 |
|  | Saver DSP Rack Cabinets | RMBC 0714 | 14 | | | | | | | | | | | 483 | 535 | 134 | 11 |
| | | RMBC 1214 | | 14 | | | | | | | | | | 483 | 535 | 222 | 12 |
| | | RMBC 0720 | 20 | | | | | | | | | | | 483 | 535 | 222 | 11 |
| | | RMBC 1220 | | 20 | | | | | | | | | | 483 | 535 | 222 | 17 |
|  | BC Cabinets (DSP Multipower) | MPBC | 20 | 20 | | | | | | | | | | 425 | 563 | 222 | 16 |
|  | V type DSP Multipower Cabinets | MPBC-V | 20 | | | | | | | | | | | 445 | 677 | 132.9 | 15 |
| | Battery connection cables depend on UPS models. Battery cable price is not included in cabinet price. | | | | | | | | | | | | | | | | |

# REFERENCES

- ABB – GERMANY
- ABB - SWEDEN
- AGUSTA WESTLAND – ITALY
- AKZO NOBEL - PAKISTAN
- AIRPORT AUHORITY OF INDIA
- ALBARAK BANK – SOUTH AFRICA
- ALCATEL - PORTUGAL
- ALPHA MEDICAL – FRANCE
- AMALGAMATED HEALTH CARE SOUTH AFRICA
- ALVARVE UNIVERSITY - PORTUGAL
- ANGOLA AIRPORT – ANGOLA
- ATATURK AIRPORT - TURKEY
- AUCHAN SUPERSTORES - ITALY
- AZERCELL - AZERBAIJAN
- BANGLALINK-BANGLADESH
- BANK OF GUINEA-GUINEA
- BANK AL HABIB-PAKISTAN
- BANQUE B.C.P – FRANCE
- BARILLA - ITALY
- BARWON PRISON-AUSTRALIA
- BASHKORTOSTANA TV - RUSSIA
- BATUMI AIRPORT- GEORGIA
- BAUER - GERMANY
- BLOEMFONTEIN INT AIRPORT- SOUTH AFRICA
- BOUYGUES TELECOM – FRANCE
- CAMARA MUNICIPAL DE FAFE PORTUGAL
- CANCER HOSPITAL-BANGLADESH
- CARREFOUR - TURKEY
- CARREFOUR- ITALY
- CARREFOUR - BRASIL
- CASINO DE SAINT PAIR – FRANCE
- CEGELEC - GERMANY
- CENTRE HOSPITALIER D'ARGENTAN FRANCE
- CENTRAL HOSPITAL - RUSSIA
- CENTRO HOSPITALAR COVA DA BEIRA – PORTUGAL
- CHAMBRE D'AGRICULTURE DES DEUX SEVRES – FRANCE
- CHANTIER CEGELEC BATIMENT GRAND TOULOUSE –FRANCE
- CHINABANK -KAZAKHSTAN
- CLINIQUE LA SOLANE - FRANCE
- COIMBRA CENTRO- PORTUGAL
- COLGATE PALMOLIVE -PAKISTAN
- COLOPLAST- HUNGARY
- COMMERCIAL & INDUSTRIAL CHAMBER OF SALONIKA-GREECE
- CONSOL SPECIALITY GLASS SOUTH AFRICA
- COSCOM-UZBEKISTAN
- CUSTOMS POLICE- ROMANIA
- CREDIT EUROPE BANK - RUSSIA
- CSKA STADIUM- RUSSIA
- DAIMLER CHRYSLER-GERMANY
- DANONE - FRANCE
- DELTA STATE GOVERNMENT NIGERIA
- DENEL AEROSPACE – SOUTH AFRICA
- DHL MALAYSIA- MALAYSIA
- EKO FM - NIGERIA
- ERICSSON - TURKEY
- ERICSSON-GERMANY
- ERCAN AIRPORT - CYPRUS
- EXPRESS HIGHWAY - S.KOREA
- ESIA BAKRIE TELECOM INDONESIA
- ESSILOR – SOUTH AFRICA
- EFG EUROBANK –GREECE
- FAISALABAD AIRPORT - PAKISTAN
- FARO AIRPORT - PORTUGAL
- FNB BANK - S.AFRICA
- FIDELITY BANK PLC - NIGERIA
- GAZPROM - RUSSIA
- GEOCELL-GEORGIA
- GE MONEY BANK -RUSSIA
- GILGIT AIRPORT - PAKISTAN
- GLAXO KLINE-AUSTRALIA
- GLOBE TELECOM-PHILIPPINES
- GREAT ORMOND ST HOSPITAL-UK
- H&K-TAIWAN
- HANKOOK TIRE - HUNGARY
- HIRSCHMANN ELEK - HUNGARY
- HOME CREDIT&FINANCE BANK RUSSSIA
- HOSPITAL LOCAL DE BAUME-LES-DAMES -FRANCE
- HOSPITAL DE AVEIRO – PORTUGAL
- HOSPITAL DE BELLVITGE-SPAIN
- HOSPITAL DE BENIDORM-SPAIN
- HOTEL ST. JOSEPH, KARLOVY VARY CZECH REPUBLIC
- IKEA-UK
- IKEA - RUSSIA
- IMMIGRATION DEPT-HONG KONG
- INCREDIBANK -RUSSIA
- INDOSAT-INDONESİA
- INOX - INDIA
- INTERTEK -HONG KONG
- INTERCONTINENTAL BANK PLC NIGERIA
- IRIT UNIVERSITY - FRANCE
- IS BANK - TURKEY
- ISTANBUL LRT-BOMBARDIER TURKEY
- ISP TAIWAN
- ISLAMABAD AIRPORT - PAKISTAN
- JSC-RUSSIA
- KARACHI AIRPORT - PAKISTAN
- K MOBILE GSM-KAZAKHSTAN
- KAUFLAND - POLAND
- KAZAK TELECOM – KAZAKHSTAN
- KCEL -KAZAKHSTAN
- KIA MOTORS - S.KOREA
- KING SHAKA INT AIRPORT – SOUTH AFRICA
- KNAUF GIBS – RUSSIA
- KOREAN TELECOM - S.KOREA
- KWAIT PETROLEUM-ITALY
- LAGOS TELEVISION - NIGERIA
- LAUSANNE METRO- SWITZERLAND
- LEICESTER MERCURY NEWSP-UK
- LG - S.KOREA
- MARZ - GERMANY

- MEGA CENTER- RUSSIA
- MELO MEDICAL – SOUTH AFRICA
- MEMORIAL HOSPITAL - PAKISTAN
- MEWAH OILS SDN BHD - MALAYSIA
- MICROSOFT - TURKEY
- MIDDLESEX UNIVERSITY-UK
- MINISTRY OF AGRICULTURE ROMANIA
- MINISTRY OF COMMUNICAT. ROMANIA
- MINISTRY OF EDUCATION KAZAKHSTAN
- MINISTRY OF JUSTICE- ROMANIA
- MINISTRY OF HEALTH- RUSSIA
- MINISTRY OF FINANCE –INDONESIA
- MINITARY HOSPITAL - SAUDI ARABIA
- MGU UNIVERSITY - RUSSIA
- MOLDCELL- MOLDOVIA
- MOLODAYA GVARDIYA RUSSIA
- MOTOROLA-HONG KONG
- MTN GSM - S.AFRICA
- MULTIRAMA- BULGARIA
- NATIONAL BANK OF KIRGIZYSTAN
- NATIONAL BANK OF PAKISTAN
- NATIONAL SEMICON.- HONG KONG
- NATIONAL BANK OF GREECE GREECE
- NATIONIAL ELECTRIC CO.- BULGARIA
- NATIONAL ORTOPAEDIC HOSPITAL, IGBOBI - NIGERIA
- NATIONAL HIGHWAY –EUROIONIA CONSORTIUM – GREECE
- NUMERICABLE - FRANCE
- NESTLE- PAKISTAN
- NIKONA- MACEDONIA
- NORTHUMBRIA POLICE - UK
- OBI MARKET - HUNGARY
- ORASCOM TELECOM-BANGLADESH
- OR TAMBO INT AIRPORT – SOUTH AFRICA
- OSMO- GERMANY
- PARQUE NASCENTE - PORTUGAL
- PETROKAZAKISTAN - KAZAKHSTAN
- PETRONAS MITCO (JAPAN) SDN BHDMALAYSIA
- PHILIPS - TURKEY
- PHILIPS ELECTRONICS-HONG KONG
- PHILIPS MEDICAL - S.AFRICA
- PHILIPS-HOLLAND
- PHILIPS PROJECT CENTRE -NIGERIA
- PLANET PRESS - NIGERIA
- PKP (NATIOANL POLISH RAILWAY) POLAND
- POLICE STATIONS - POLAND
- POLISH ARMY - POLAND
- POST OFFICES - POLAND
- POST & TELECOM-INDONESIA
- PORTUGAL TELECOM - PORTUGAL
- PRINCE SULTAN CARDIAC HOSPITAL-SAUDI ARABIA
- PT TELECOM-INDONESIA
- PWC-BULGARIA
- QUALITY CINE LABS - INDIA
- RADIOTELEOPTIKI NEAPOLIS-GREECE
- RED CROSS - PROTUGAL
- RENAULT - FRANCE
- RESERVE BANK OF INDIA
- REUTERS - GERMANY
- RIKSBYGGEN-SWEDEN
- ROCA SANITARIOS-SPAIN
- ROYAL HOSPITAL-AUSTRALIA
- RODAX S.A. - GREECE
- SAFT - FRANCE
- SAMSUNG - S.KOREA
- SAUDI ARAMCO-SAUDI ARABIA
- SAUDI ERICSSON-SAUDI ARABIA
- SEISSENSCHMIDT - HUNGARY
- SEL BIO PARIS OUEST - FRANCE
- SHANGRI-LA HOTEL-HONG KONG
- SHINBUNDANG RAILWAY – SOUTH KOREA
- SHELL - GERMANY
- SIEMENS - TURKEY
- SIEMENS -GERMANY
- SIEMENS - S.AFRICA
- SIEMENS-KAZAKHSTAN
- SOCIAL INSURANCE - POLAND
- SOMERSET AND AVON POLICE-UK
- SOUTHPORT HOSPITAL-UK
- SPACE CO- AZERBAIJAN
- SPORT STADIUM, PLZEN-CZECH REPUBLIC
- ST JAMES HOSPITAL-UK
- STATE BANK OF INDIA
- SYARIKAT PRASARANA NEGARA BERHAD – MALAYSIA
- SWISS INS - SWITZERLAND
- TECHNICAL CHAMBER OF GREECE GREECE
- TECHNICAL UNIVERSITY OF IONIAN ISLANDS-GREECE
- TECHNOLOGY-HONG KONG
- TECHNOPOLIS-BULGARIA
- THALES RECHEARCH AND TECHNOLOGY FRANCE
- THYSSENKRUPP AIRPORT SYSTEMS, S.A.- SPAIN
- TRANSTEL - S.AFRICA
- TRANSWORLD PUBLISHING-UK
- TYGERBERG HOSPITAL - S.AFRICA
- UNIVERSIDAD DE ZARAGOZA-SPAIN
- UNIVERSITY OF SCIENCE & UNIVERSTY OF SINGD-PAKISTAN
- UNIVERSITY HOSPITAL PRAGUE 2 CZECH REPUBLIC
- VÄXJÖ MUNICIPALITY-SWEDEN
- WAGON AUTOMOTIVE (FARNIER PENIN) FRANCE
- WOLMIDO MONORAIL – SOUTH KOREA
- ZANTE HOSPITAL -GREECE
- ZARA SHOP -RUSSIA
- RIYADH POISON CONTROL CENTER – S. ARABIA
- NATIONAL HAYAT HOSPITAL – S. ARABIA
- PRINCE MOHAMMAD BIN ABDULAZIZ HOSPITAL – S. ARABIA
- ALMAJMAAH UNIVERSITY – S. ARABIA
- ABOUARISH HOSPITAL – S. ARABIA
- SAMTA HOSPITAL – S. ARABIA
- SABYA HOSPITAL – S. ARABIA
- ALMOSAM HOSPITAL – S. ARABIA
- AL RAYTH HOSPITAL – S. ARABIA

# CUSTOMER SERVICES

## Reliable

Directly present in more than 70 countries and servicing its products worldwide, a team of qualified engineers is available 24/7/365 to support your UPS system to ensure power quality and availability to the most critical loads.

## Excellent

Inform's competitive edge lies in its ability to provide high value-added UPS systems and services for both end users and business partners.
For Inform, creating value means coming up with solutions for lower energy consumption, but also integrating product design into the overall development process.

## Tailor-made

Inform offers a complete range of specific solutions and services to meet customer requirements:

- Technical pre-sales support at the project design stage
- Factory acceptance test
- Supervision of installation, testing and commissioning, site acceptance test
- Operator training
- Site audit
- Warranty extension
- Annual maintenance contract
- Fast intervention on emergency call

# SUPPORT

**SITE INSPECTION, INSTALLATION SUPERVISION.**
We perform a comprehensive check of the UPS environment to ensure safety and fault-free operation.
Our technical experts give manufacturer's recommendations to the site engineer or electrical contractors, and supervise the UPS installation before load power-up.

**SITE TEST, COMMISSIONING.**
Our Service Engineers conduct rigorous site tests and full setting-up of the UPS system before going live. They also perform site acceptance tests according to your requirements.
Commissioning operations for all UPS are carried out by qualified engineers to guarantee seamless start-up.
After the final handing over of the UPS system, a Test and Commissioning report is delivered to you.

# TRAINING

We offer on-site training to ensure your equipment's safe and efficient operation.
Troubleshooting courses are also available in our plants for intensive hands-on practice on UPS training equipment.

# MAINTENANCE

**PREVENTIVE MAINTENANCE**
Electronic equipment and power systems, such as UPS, contain life-limited components and parts that must be replaced according to the manufacturer's specifications.
To ensure optimal performance and to protect your critical application from potential downtime, it is crucial to perform preventive maintenance operations on a regular basis and replace parts when needed. Our Service Contracts include cleaning, IR thermography, measurements, functional tests, event log and power quality analysis, battery health check, hardware and software upgrades, and technical reports.
A Preventive Maintenance Plan is one of the most cost-effective actions that can preserve your initial investment and ensure your business continuity.

**CORRECTIVE MAINTENANCE, EMERGENCY CALL**
In the event of an Emergency Call, our worldwide service network, with engineers and spare-parts stocks strategically located as close as possible to your site, guarantees a fast intervention time with 24/7/365 assistance.
After connecting his laptop to your UPS, very powerful diagnostic software helps our engineer to identify the fault, thus ensuring short MTTR (Mean Time To Repair).
Corrective actions are performed such as part replacement, adjustments and upgrades to return the UPS system back to normal operation.

**HEADQUARTER**
Esenşehir Mah. Hale Sk. No: 6/1 Ümraniye, İstanbul, Turkey
Tel: +90 216 622 58 00 (pbx)
Fax: +90 216 621 92 35

**FACTORY**
Pelitli Mah. 4440 Sk. No: 12, Gebze, Kocaeli, Turkey
Tel: +90 262 751 16 00

**www.informups.com**



A Group brand legrand